Dernier indice 15/11/07

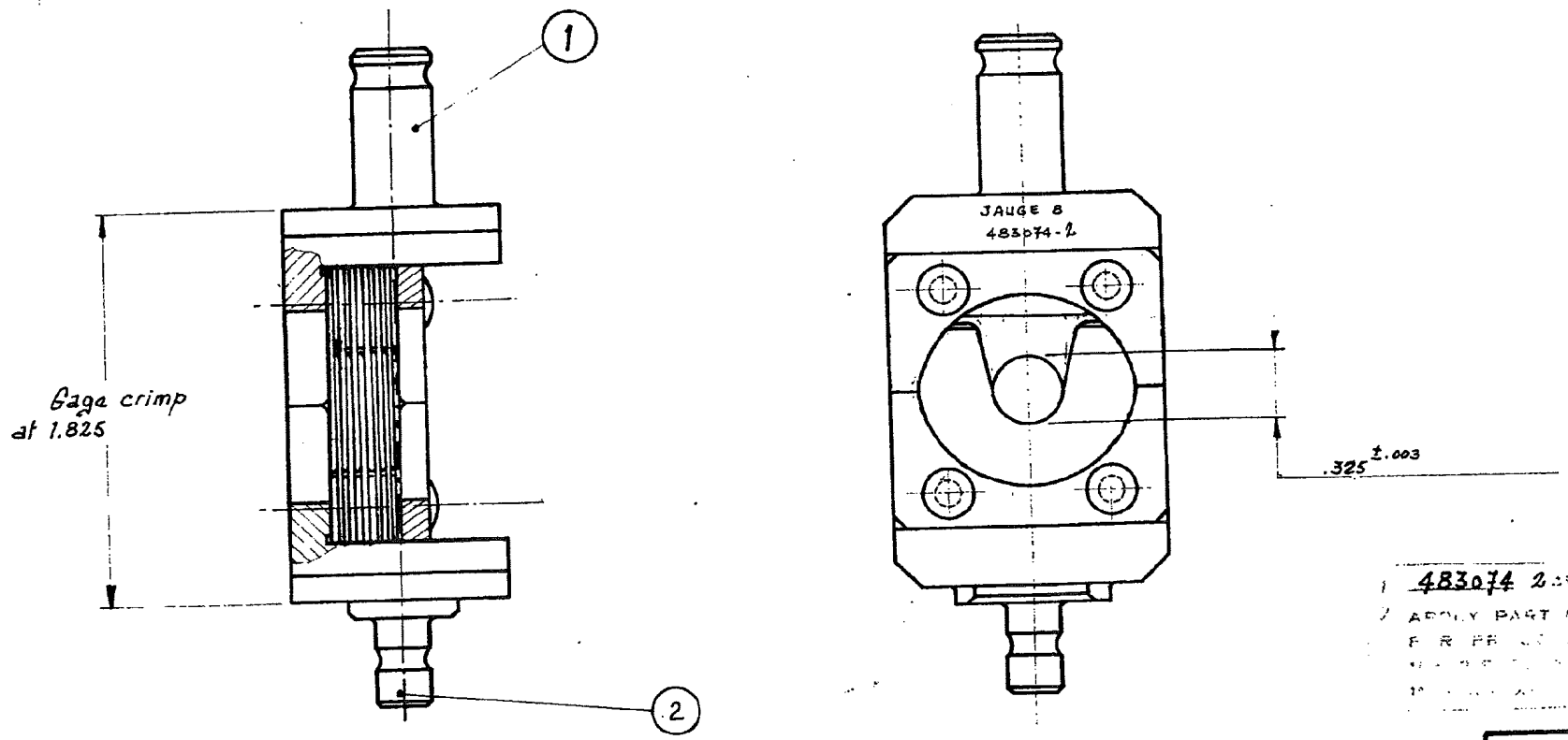

483074 2

APPLY PART NUMBER

SHEET 1 OF 1

			PART LIST	
5				
4				
3				
2	483082-2	B	Die assembly lower	1
1	483078-2	B	Die assembly upper	1
it.	P/N	size	Name	Qty

NUMBER 483 074-2

LTR	REVISION RECORD	ECN	DR	CHK	DATE
	Released				1.82

UNLESS OTHERWISE SPECIFIED: REMOVE BURRS BREAK SHARP EDGES .016 R MAX; DIMENSIONS .00=±.02 .000=±.005 .0000=±.0005; ANGLES ± 0°30

MATERIAL —
HEAT TREAT —
COATING OR PLATING —

DR 04.01.82
CHK
APP
REL

Tyco Electronics — Tyco Electronics AMP GmbH, 64625 Bensheim (Germany)

TERMINAL #8 | FIRST USED 69061 | LOC F | B | C - 483 074-2 | REV A

TYPE | NAME DIE ASSEMBLY Grimper Unterbaugruppe | SCALE 2/1

DIFFUSION N°

ON

PRINT 0 7

a quiconque n'appartenant pas à AMP sans une autorisation écrite de AMP de France SA

DIMENSIONS IN INCHES DO NOT SCALE PRINT

483074-2