used for:

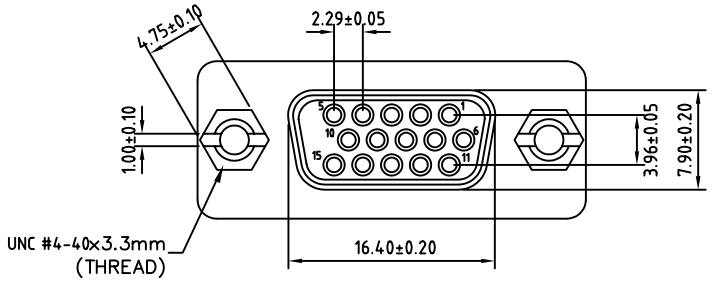

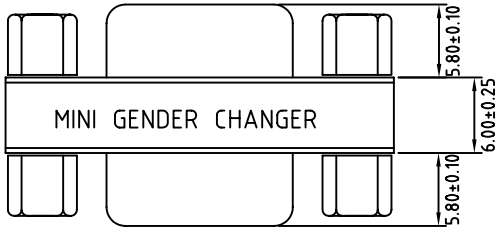

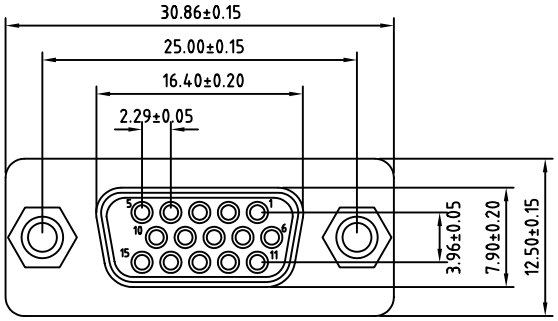

UNC #4-40 HEX Screw

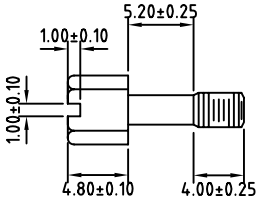

UNC #4-40 HEX Nut

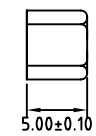

HD 15 F/F GENDER CHANGER PIN OUT

15P Female		15P Female
1	----------	1
2	----------	2
8	----------	8
10	----------	10
15	----------	15
G	----------	G

SPECIFICATIONS:

Material and Finish:

Insulator: PBT, UL94 V-0 Rated
Contacts: Brass, Gold over Nickel Plated
Shell: Steel, Tin Plated
UNC #4-40 HEX Screw: Brass, Nickel Plated
UNC #4-40 HEX Nut: Brass, Nickel Plated

Electrical:

Current Rating: 3 A Max.
Insulation Resistance: 1000 Mohms Min. @ 500 VDC
Dielectric Withstanding Voltage: 1000 VAC / 1 Minute
Operating Temperature: -55℃ To +105℃

Directive 2002/95/EC „RoHS" Compliant

THIS DRAWING MAY NOT BE COPIED OR REPRODUCED IN ANY WAY, AND MAY NOT BE PASSED ON TO A THIRD PARTY WITHOUT WRITTEN PERMISSION. OWNERSHIP AND COPYRIGHT OF CONEC CORPORATION

DO NOT ALTER CAD DRAWING BY HAND

tolerance
unless otherwise specified tolerance shall be as follow
Decimal: .x ±0.20 .xx ±0.15 Angles:

rev.	description	date	name
a	origin		

finish

Dim. in mm

	date	name
2007		
draw.	June 28	Vincent Ke
appd.	June 28	J. Chaudry
norm		
d-old		

CONEC®

scale:
material: SPECIFICATIONS
title: HD 15p Female/Female Gender Changer
RoHS Compliant
drawing no.: 16K1A1655
AutoCAD 2005
DIN A3
sheet 1/1
part no.: DAH1SSAAX01A