THIS DRAWING IS UNPUBLISHED. RELEASED FOR PUBLICATION – ,N/A .
© COPYRIGHT N/A By – ALL RIGHTS RESERVED.

LOC	DIST
DF	FO

REVISIONS

P	LTR	DESCRIPTION	DATE	DWN	APVD
	J	TYCO LOGO REPLACED WITH THE AMP BRAND LOGO	28APR11	CT	DH

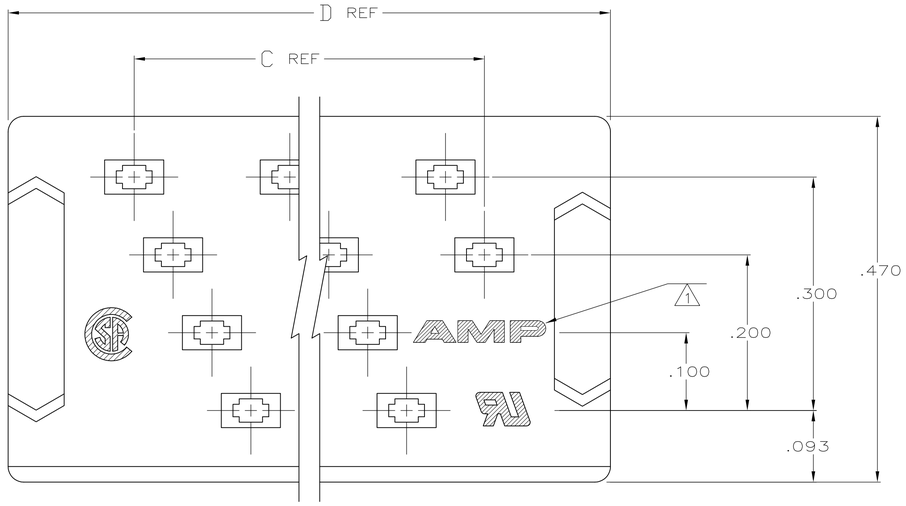

1. AMP TRADEMARK LOCATED IN APPROX AREA SHOWN.
2. STANDOFFS: POSN 10 (8) STANDOFFS AS SHOWN.
   POSN 14 (11) STANDOFFS, 3 PER DIAGONAL ROW.
   POSN 18 (14) STANDOFFS, 3 PER DIAGONAL ROW.
   POSN 22 (17) STANDOFFS, 3 PER DIAGONAL ROW.
   POSN 26 (20) STANDOFFS, 3 PER DIAGONAL ROW.
   POSN 30 (23) STANDOFFS, 3 PER DIAGONAL ROW.
   POSN 34 (26) STANDOFFS, 3 PER DIAGONAL ROW.
   POSN 38 (29) STANDOFFS, 3 PER DIAGONAL ROW.
   POSN 42 (32) STANDOFFS, 3 PER DIAGONAL ROW.
   POSN 46 (35) STANDOFFS, 3 PER DIAGONAL ROW.
   POSN 50 (38) STANDOFFS, 3 PER DIAGONAL ROW.
   POSN 54 (41) STANDOFFS, 3 PER DIAGONAL ROW.
   POSN 58 (44) STANDOFFS, 3 PER DIAGONAL ROW.
3. FINISH: BRIGHT TIN–LEAD .000100–.000200 THK OVER NICKEL .000050 MIN THK.
4. HEIGHT AFTER TERMINATION IS .238 REF.
5. FINISH: BRIGHT TIN .000100–.000200 THK OVER NICKEL .000050 MIN THK.

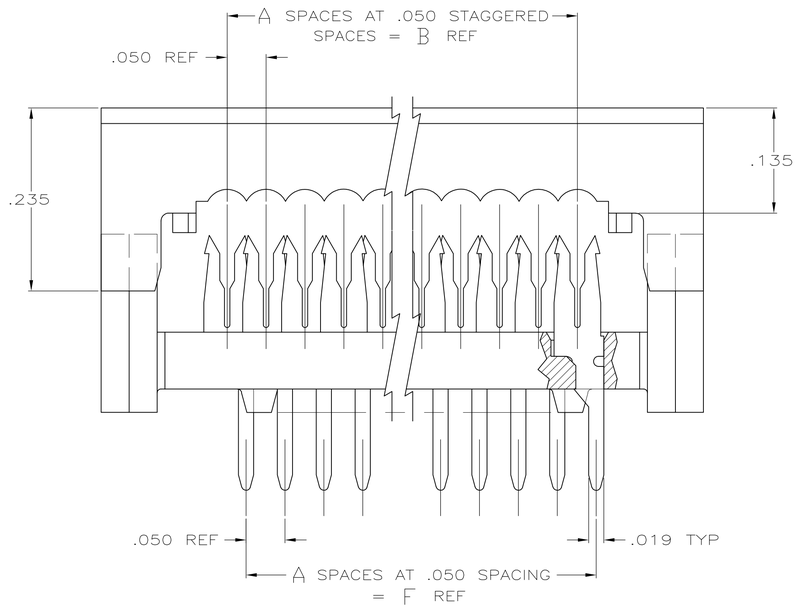

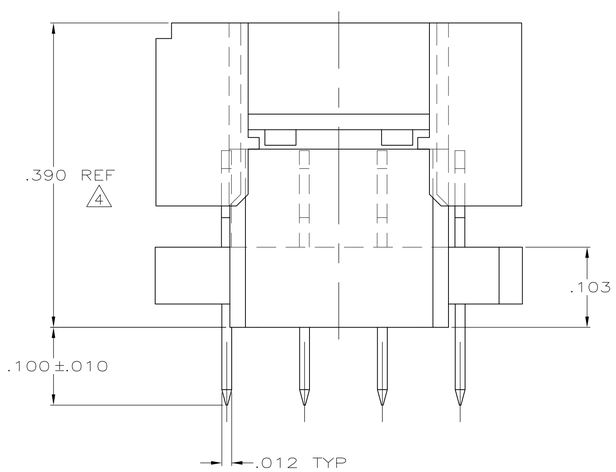

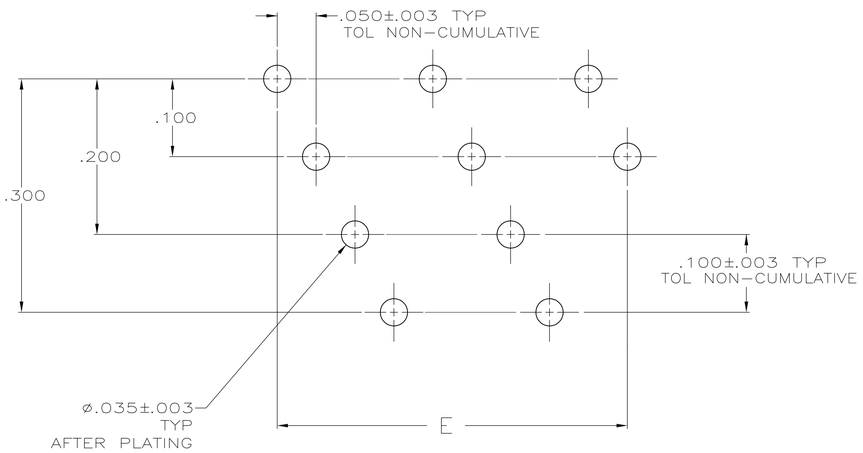

RECOMMENDED HOLE LAYOUT

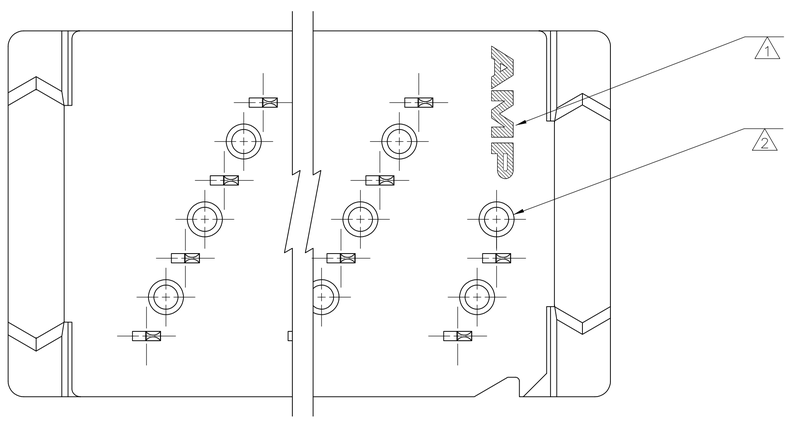

	5	2.450	2.450	2.774	2.450	2.450	49	50	6–111037–1
	5	1.650	1.650	1.974	1.650	1.650	33	34	5–111037–7
	5	1.450	1.450	1.774	1.450	1.450	29	30	5–111037–6
	5	1.250	1.250	1.574	1.250	1.250	25	26	5–111037–5
	5	.650	.650	.974	.650	.650	13	14	5–111037–2
	5	.450	.450	.774	.450	.450	9	10	5–111037–1
OBSOLETE	3	2.850	2.850	3.174	2.850	2.850	57	58	1–111037–3
OBSOLETE	3	2.650	2.650	2.974	2.650	2.650	53	54	1–111037–2
	3	2.450	2.450	2.774	2.450	2.450	49	50	1–111037–1
OBSOLETE	3	2.250	2.250	2.574	2.250	2.250	45	46	1–111037–0
OBSOLETE	3	2.050	2.050	2.374	2.050	2.050	41	42	111037–9
OBSOLETE	3	1.850	1.850	2.174	1.850	1.850	37	38	111037–8
	3	1.650	1.650	1.974	1.650	1.650	33	34	111037–7
	3	1.450	1.450	1.774	1.450	1.450	29	30	111037–6
	3	1.250	1.250	1.574	1.250	1.250	25	26	111037–5
OBSOLETE	3	1.050	1.050	1.374	1.050	1.050	21	22	111037–4
OBSOLETE	3	.850	.850	1.174	.850	.850	17	18	111037–3
	3	.650	.650	.974	.650	.650	13	14	111037–2
	3	.450	.450	.774	.450	.450	9	10	111037–1
	FINISH	F	E	D	C	B	A	NO OF POSN	PART NUMBER

THIS DRAWING IS A CONTROLLED DOCUMENT.

DIMENSIONS: INCHES

TOLERANCES UNLESS OTHERWISE SPECIFIED:
0 PLC ± –
1 PLC ± –
2 PLC ± –
3 PLC ± .005
4 PLC ± –
ANGLES ± –

MATERIAL: MOLDED PARTS: 94V–0 RATED THERMOPLASTIC, COLOR: BLACK. CONTACTS: PH BRZ PER QQ–B–750

FINISH: CONTACTS 3

DWN J. PEACHEY 05–MAR–86
CHK M.SCULLY 23–MAY–86
APVD D.HOFFMAN 23–MAY–86

PRODUCT SPEC —
APPLICATION SPEC 114–40005
WEIGHT —

TE Connectivity

NAME: KIT, AMP–LATCH PADDLEBOARD PREASSEMBLED, .100 LONG POSTS SHORT END, FULL TIN PLATED CONTACTS

SIZE	CAGE CODE	DRAWING NO	RESTRICTED TO
A1	00779	C–111037	—

CUSTOMER DRAWING | SCALE 10:1 | SHEET 1 OF 1 | REV J