DRAWING MADE IN AMERICAN PROJECTION

NUMBER 91003

© 1970 BY A-MP INCORPORATED
ALL RIGHTS RESERVED
A-MP PRODUCTS COVERED BY PATENTS AND/OR PATENTS PENDING.

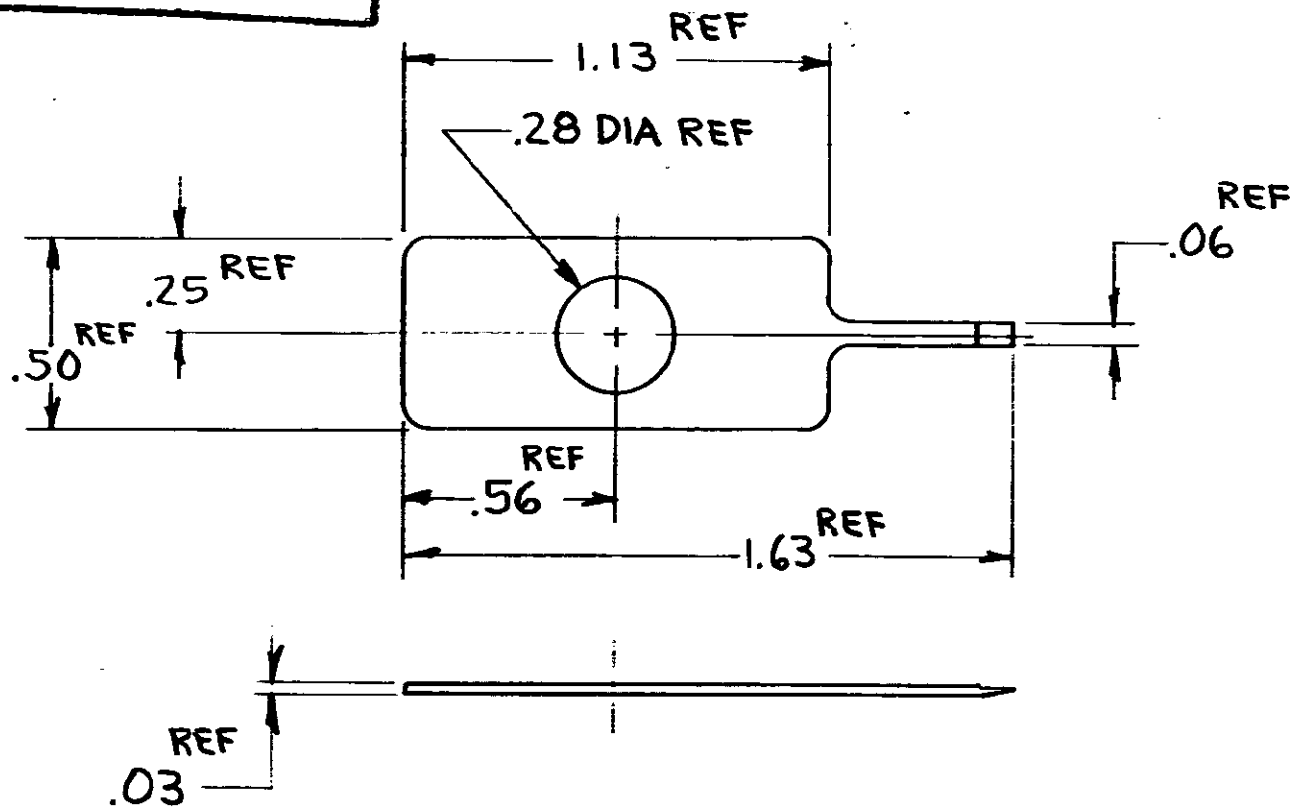

91003-1 AS SHOWN

MATERIAL: CARBON STEEL	HEAT TREAT: ~	COATING OR PLATING: BLACK OXIDE	
UNLESS OTHERWISE SPECIFIED: REMOVE BURRS, BREAK SHARP EDGES .015 R MAX; DECIMALS: .00 = ±.02, .000 = ±.005, .0000 = ±.0005; ANGLES: ±0° 30'			
PART USED: 66061	WIRE RANGE	CLASS	TYPE: MIN. DUALATCH
P.P.P.	AREA	SCALE: 2:1	AMP INCORPORATED HARRISBURG, PENNA.
DR: Gold Lemon 7-8-70			
CHK: Cliff Baker 7-8-70		LOC: M	NO: 91003	REV: A
APP: [illegible] 7-8-70		NAME: TOOL INSERTION EXTRACTION	
SEL:			

LTR	REVISION RECORD	ECN	BY	DATE
A	LOC "M" WAS "S"	[illegible]	RJ	8-[illegible]
0	RELEASED FOR COST.	~	CO	7-70

DIMENSIONS IN INCHES. DO NOT SCALE PRINT.

PRINT DIST

AMP 1254 REV 9/66

CUSTOMER DRAWING