THIS DRAWING IS UNPUBLISHED. RELEASED FOR PUBLICATION – ; – .
© COPYRIGHT – BY TYCO ELECTRONICS CORPORATION. ALL INTERNATIONAL RIGHTS RESERVED.

PART NUMBER	REV	FIRST USED
1385845 – 1	B	122500 – 1
1385845 – 2	B	565435 – 5
1385845 – 3	B	354500 – 1

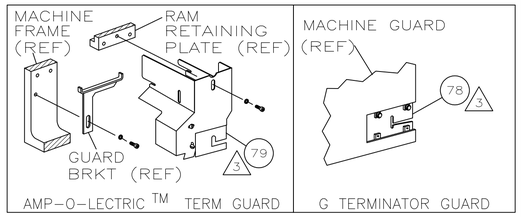

TERMINAL NAME: TERMINAL, FEMALE

AMP TERM PN	MFR TERM PN
1572615	2977114

DELPHI TERMINAL CUSTOMER CRIMP SPECS

PAD LTR	CRIMP HEIGHT	WIRE SIZE
A	.057 ±.002 [1.45 ±0.05mm]	18
B	.055 ±.002 [1.4 ±0.05mm]	20
C	NOT	USED
D	NOT	USED

CRIMP	SIZE	TYPE	RANGE
WIRE	.110 [2.79mm]	F	20–18
INSUL	.140 [3.56mm]	0	Ø.125

WIRE STRIP LENGTH	TERM APPL SPEC	FEED	APPL INSTRUCTION	SET UP GAGE	LAYOUT
.188–.219	NONE	.688	408–8040	458637–1	L2699

LOC	DIST
A	66

REVISIONS

P	LTR	DESCRIPTION	DATE	DWN	APVD
	B	ECR–08–009041	4–2008	MY	GB

–1	LEADMAKER	MECH POST FEED
–2	BENCH MODEL K	MECH PRE FEED
–3	BENCH MODEL G	MECH PRE FEED

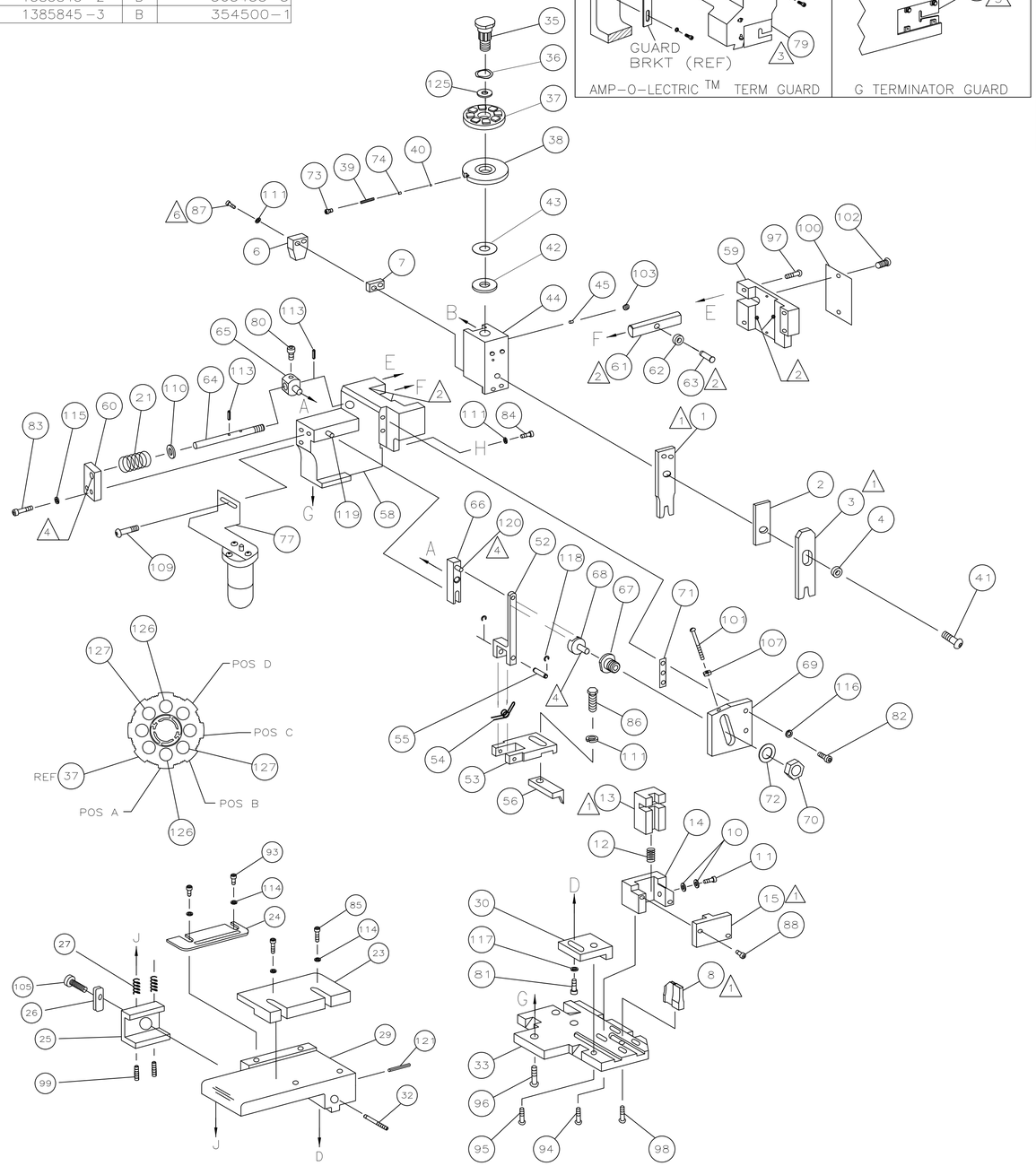

						129
						128
2	2	2	–	2–354779–3	PIN, WIRE DISC (.3105)B	127
2	2	2	–	1–354779–9	PIN, WIRE DISC (.3085)A	126
1	1	1	–	986950–1	WASHER, FLAT PRECISION	125
1	1	1	–	217238–1	GENERAL INSTRUCTION PACKAGE	124
1	1	1	–	4088040	SF APPL INST 408–8040	123
						122
1	1	1	–	4–21028–0	PIN, SLTD SPRG(Ø.094x.75)	121
1	1	1	–	1–21030–1	PIN,DOWEL(Ø.187x.50)LEVER	120
1	1	1	–	1–21030–6	PIN,DOWEL(Ø.187x1.25)HOUSING	119
2	2	2	–	21045–3	RING,RET "C"(Ø.187)FD FING PIN	118
1	1	1	–	21024–5	WASHER, LOCK(#10)ADJ BLOCK	117
2	2	2	–	21024–5	WASHER,LOCK(#10)ADJ PLATE	116
2	2	2	–	21024–5	WASHER,LOCK(#10)FEED GDE ROD	115
4	4	4	–	21024–2	WASHER,LOCK(#4)FRONT STP GUIDE	114
2	2	2	–	5–21028–1	PIN,SLT SPR(Ø.125x.50)ADJ ROD	113
						112
4	4	4	–	21024–4	WASHER,LOCK(#8)STRIPPER	111
1	1	1	–	21899–4	WASHER,FLAT(Ø5/16)SCREW ADJ	110
–	1	–	–	2–21002–6	SCR,BHC(10–32x.38)LUBE ASSY	109
						108
1	1	1	–	21068–5	NUT,HEX(6–32)FEED ADJ	107
						106
1	1	1	–	22353–8	SCR,SHLD,SLOT HEAD(8–32)	105
1	1	–	–	992031–1	PIN, CLEVIS	104
1	1	1	–	21009–2	SCR,SKT SET(1/4–20x.25 LW)RAM	103
2	2	2	–	21017–2	SCR,DRIVE(#2x.19)ID PLATE	102
1	1	1	–	6–23715–5	SCR,PAN HD(6–32x1.50)FEED ADJ	101
1	1	1	–	461264–1	PLATE, IDENTIFICATION	100
2	2	2	–	5–21006–6	SCR,SET (10–32x.75)DRAG	99
1	1	1	–	22733–8	SCR,BHC(8–32x.38 LW)ANVIL	98
4	4	4	–	2–21002–9	SCR,BHC(10–32x.75)CAP	97
3	3	3	–	2–22733–8	SCR,BHC(1/4–20x.62)HOUSING	96
1	1	1	–	2–21002–7	SCR,BHC(10–32x.50)SG ADJ BLOCK	95
2	2	2	–	2–21002–2	SCR,BHC(8–32x.50)TERM H DWN	94
2	2	2	–	1–21000–3	SCR,BHC(4–40x.25)R STP GDE	93
						92
1	1	1	–	1–21002–7	SCR,BHC(6–32x.38)CAM	91
						90
1	1	–	–	7–21000–9	SCR,SHC(4–40x.19)STRIPPER	89
2	2	2	–	1–21000–9	SCR,SHC(6–32x.38)R SHEAR PLATE	88
6 2	2	2	–	3–21000–0	SCR,SKT CAP (8–32x.81) R DEP	87
1	1	1	–	2–22603–0	SCR,HEX HD(8–32x.31)FEED FINGER	86
2	2	2	–	1–21000–5	SCR,SHC(4–40x.50)FR ST GUIDE	85
1	1	1	–	2–21000–7	SCR,SHC(8–32x.50)STRIPPER	84
2	2	2	–	3–21000–7	SCR,SHC(10–32x.75)FEED ROD GD	83
2	2	2	–	3–21000–6	SCR,SHC(10–32x.62)FD ADJ BLK	82
1	1	1	–	3–21000–4	SCR,SHC(10–32x.38)SG ADJ BL	81
1	1	1	–	3–21000–4	SCR,SHC(10–32x.38)PIVOT BLK	80
3 –	REF	–	–	455749–1	GUARD, WINDOW	79
REF	–	–	–	679532–1	INSERT, GUARD	78
–	1	–	–	1–465184–0	LUBRICATOR ASSY	77
						76
						75
1	1	1	–	690603–1	SPRING, ASSIST	74
1	1	1	–	23030–1	SCR,SHC(6–32x.25 SL)INS DISC	73
1	1	1	–	458109–1	WASHER, SPECIAL	72
1	1	1	–	690517–1	SPACER	71
–3	–2	–1	U/M	PART NO	DESCRIPTION	ITEM NO

QTY REQD PER ASSY — PARTS LIST

1	1	1	–	22594–8	NUT,HEX(1/2–20)	70
1	1	1	–	240628–1	PLATE, ADJUSTMENT	69
1	1	1	–	240626–1	SHAFT, PIVOT	68
1	1	1	–	240633–1	BUSHING	67
1	1	1	–	455680–1	LEVER, INTERMEDIATE	66
1	1	1	–	240629–1	BLOCK, PIVOT	65
1	1	1	–	240632–2	SCREW, ADJ FEED ROD	64
1	1	1	–	240659–3	PIN, CAM ROLLER	63
1	1	1	–	240658–1	ROLLER, CAM	62
1	1	1	–	454398–2	ROD, FEED	61
1	1	1	–	454178–1	GUIDE, FEED ROD	60
1	1	1	–	454220–1	CAP, RAM	59
1	1	1	–	454485–1	HOUSING	58
						57
1	1	1	–	3–694433–9	PAWL, FEED	56
1	1	1	–	240624–1	PIN, FEED FINGER	55
1	1	1	–	691499–1	SPRING, FEED FINGER	54
1	1	1	–	690541–1	HOLDER, FEED FINGER	53
1	1	1	–	455679–1	LEVER, TERMINAL FEED ARM	52
						51
						50
1	–	–	–	690602–6	CAM, PRE–FEED 1 5/8 ST	49
–	1	–	–	690602–5	CAM, PRE–FEED 1 1/8 ST	48
–	–	1	–	690501–4	CAM, POST–FEED 1 5/8 ST	47
						46
1	1	1	–	690191–1	PLUG, NYLON	45
1	1	1	–	455673–1	RAM	44
1	1	1	–	690125–1	WASHER, LAMINATED	43
1	1	1	–	1–690124–4	WASHER, RAM	42
1	1	1	–	7–21002–9	BOLT, CRIMPER(5/16x1.00)	41
1	1	1	–	23241–6	BALL, STEEL	40
1	1	1	–	690170–1	SPRING, COMPRESSION	39
1	1	1	–	690142–1	DISC, INSULATION	38
1	1	1	–	354777–1	WIRE DISC, PLASTIC	37
1	1	1	–	22480–5	WASHER, SPRING	36
1	1	1	–	690212–1	POST, RAM	35
						34
1	1	1	–	455675–3	PLATE, BASE	33
1	1	1	–	690432–3	ADJUSTMENT SCREW	32
						31
1	1	1	–	455689–1	BLOCK, STRIP GUIDE ADJ	30
1	1	1	–	1–844048–7	PLATE, STRIP GUIDE	29
						28
2	2	2	–	1–22282–3	SPRING, DRAG	27
1	1	1	–	356835–1	LEVER, DRAG RELEASE	26
1	1	1	–	1673009–1	DRAG, TERMINAL	25
1	1	1	–	690438–1	GUIDE, STRIP (REAR)	24
1	1	1	–	1–189124–4	GUIDE, STRIP (FRONT)	23
–	–	1	–	690472–2	STRIPPER	22
1	1	1	–	4–22284–9	SPRING, FEED RETURN	21
1	1	–	–	679218–1	STRIPPER WIRE STOP ASSY	20
1	1	–	–	458949–1	STRIPPER	19
						18
						17
						16
1 1	1	1	–	1673256–2	PLATE, SHEAR (REAR)	15
1	1	1	–	1673255–1	HOLDER, SHEAR (REAR)	14
1 1	1	1	–	1673257–2	SHEAR, FLOAT (REAR)	13
1	1	1	–	4–22280–8	SPRING, SHEAR	12
1	1	1	–	1–21000–9	SCR,SHC (6–32X.75)SHEAR STOP	11
2	2	2	–	21055–5	WASHER,FLAT (#6) SHEAR STOP	10
						9
1 1	1	1	–	2–662189–9	ANVIL	8
1	1	1	–	4–240641–7	SPACER, DEPRESSOR (REAR)	7
1	1	1	–	690468–6	DEPRESSOR, SHEAR (REAR)	6
						5
1	1	1	–	1–238009–1	SPACER, BLOCK CRIMPER	4
1 1	1	1	–	4–683454–8	CRIMPER, INSULATION	3
1	1	1	–	1–455888–0	SPACER, CRIMPER	2
1 1	1	1	–	2–456408–8	CRIMPER, WIRE	1
–3	–2	–1	U/M	PART NO	DESCRIPTION	ITEM NO

QTY REQD PER ASSY — PARTS LIST

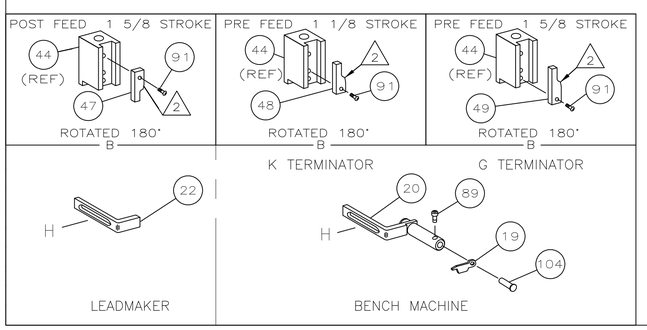

1. RECOMMENDED SPARE PARTS.
2. GREASE LIGHTLY.
3. GUARD MUST BE IN PLACE WHEN OPERATING APPLICATOR IN A BENCH MACHINE.
4. LUBRICATE DAILY USING NO. 20 MACHINE OIL.
5. ITEMS WITH QTY OF REF SPECIFIED (EXCEPT ITEMS 78 AND 79) ARE USED ON ITEM 46.
6. CUT TO LENGTH AT ASSEMBLY.

THIS DRAWING IS A CONTROLLED DOCUMENT.

DIMENSIONS: INCHES

TOLERANCES UNLESS OTHERWISE SPECIFIED: 0 PLC ± – ; 1 PLC ± – ; 2 PLC ± – ; 3 PLC ± – ; 4 PLC ± – ; ANGLES ± –

MATERIAL – FINISH –

DWN 29NOV04 C.ERISMAN
CHK –
APVD 29NOV04 T.ELBIN
PRODUCT SPEC –
APPLICATION SPEC –
WEIGHT –

Tyco Electronics
Tyco Electronics Corporation
Harrisburg, PA 17105–3608

NAME SIDE FEED HDM APPLICATOR – –

SIZE A1 | CAGE CODE 00779 | DRAWING NO C–1385845 | RESTRICTED TO –

CUSTOMER DRAWING | SCALE – | SHEET 1 OF 1 | REV B

4805 (1/08)

14APR2008 11:15am