used for: DIN EN 60603 TYPE "B 1/2"

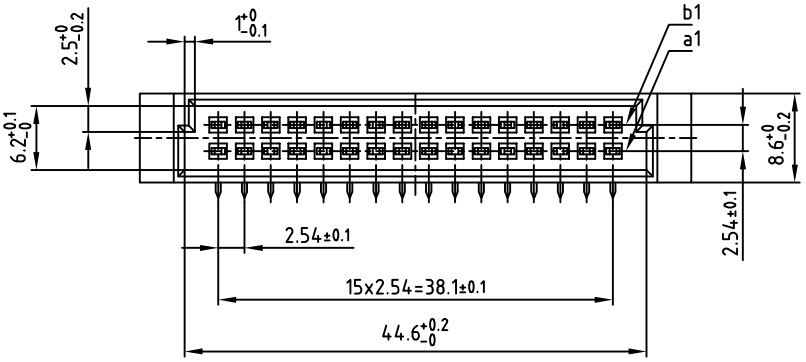

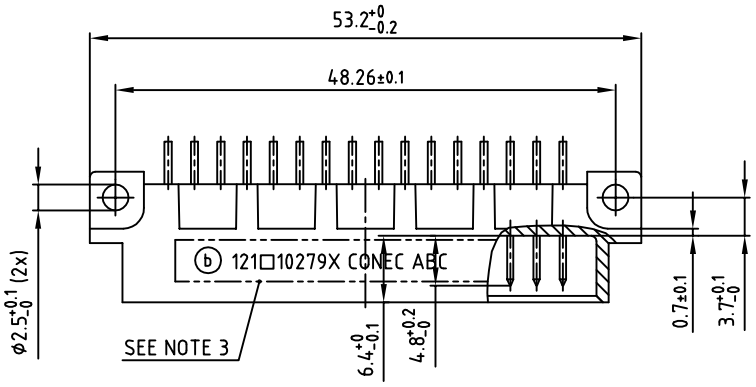

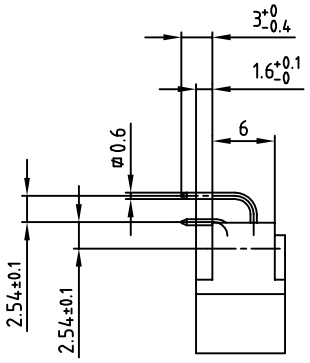

NOTES:

1. INSULATORS: PBT UL 94 V-0, GREY
2. ⓑ CONTACTS: COPPER ALLOY; PLATING (SEE PART NO.):
   - □PLEASE ADD A for GOLD over NICKEL; 50 MATING CYCLES
   - □PLEASE ADD B for GOLD over NICKEL; 400 MATING CYCLES
   - □PLEASE ADD C for GOLD over NICKEL; 500 MATING CYCLES
3. CONNECTOR IS PART MARKED: 121□10279X CONEC ABC

P.C.B. HOLE DRILLINGS

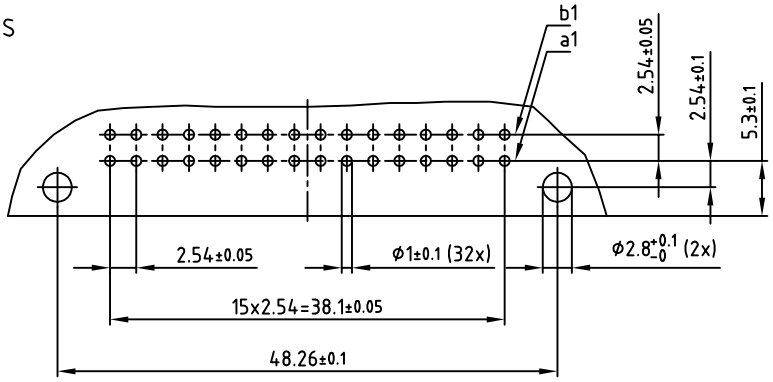

RoHS compliant

THIS DRAWING MAY NOT BE COPIED OR REPRODUCED IN ANY WAY, AND MAY NOT BE PASSED ON TO A THIRD PARTY WITHOUT WRITTEN PERMISSION. OWNERSHIP AND COPYRIGHT OF CONEC GmbH
DO NOT ALTER CAD DRAWING BY HAND

rev.	description	date	name
3 x b	Ä5572	16.03.2015	K.H.
a	Original		

General tolerance — dim. in mm

	date	name
2005		
drawn	24.11.	Lehmenkühler
appd.	24.11.	Mickenbecker
norm	DIN EN 60603	
d-old		

CONEC®

scale: 2:1
material: SEE NOTES
title: MALE CONNECTOR TYPE "B 1/2"
32pos. ANGLED
dwg no: 12K1A407
DIN-A 3
sh: 1/1
part no: ⓑ 121□10279X (see note 2)