THIS DRAWING IS UNPUBLISHED. RELEASED FOR PUBLICATION 20
© COPYRIGHT 20 BY TYCO ELECTRONICS CORPORATION, ALL RIGHTS RESERVED.

| PART NUMBER | REV | TERMINATOR | FEED TYPE | DESCRIPTION |
|---|---|---|---|---|
| 1426584-1 | A | LEADMAKER | MECH POST FEED | CUTS CARRIER |
| 1426584-2 | A | BENCH | MECH PRE FEED | CUTS CARRIER |
| 1426584-6 | A | LEADMAKER | MECH POST FEED | CONTINUOUS CARRIER |
| 7-1426584-1 | A | LEADMAKER | MECH POST FEED | -1 AND SPARE PARTS |
| 7-1426584-2 | A | BENCH | MECH PRE FEED | -2 AND SPARE PARTS |
| 7-1426584-6 | A | LEADMAKER | MECH POST FEED | -6 AND SPARE PARTS |
| 7-1426584-7 | A | - | - | SPARE PARTS KIT |

SET UP GAGE 458637-3

| LOC | DIST |
|---|---|
| A | 66 |

REVISIONS

| P | LTR | DESCRIPTION | DATE | DWN | APVD |
|---|---|---|---|---|---|
| | A | SEE ECO-05-014714 | 28NOV2005 | LJL | MC |

CRIMP DATA TYCO TERMINAL TYCO CRIMP SPECS

TERMINAL NAME: PIN & SOCKET MATE-N-LOK

| CRIMP | SIZE | TYPE | RANGE |
|---|---|---|---|
| WIRE | 2.54 [.100 IN] | F | 1.00-2.50mm² |
| INSUL | 3.30 [.130 IN] | F | 1.80-3.50 [.071-.138 IN] |

WIRE STRIP LENGTH 3.90-4.70 [.154-.185 IN]

APPL INSTRUCTIONS 408-8322

TERMINAL APPL SPEC 114-18022 - - -

FEED 12.70 [.500 IN]

TERMINALS APPLIED

| SOCKET | PIN | - | - |
|---|---|---|---|
| 163302 | 163303 | - | - |
| - | - | - | - |
| - | - | - | - |
| - | - | - | - |

| WIRE SIZE | CRIMP HEIGHT 5 | PIN PN & LENGTH [IN] |
|---|---|---|
| 2.50 mm² | 1.85 ±0.05 [.073 ±.002 IN] | 7-354778-5 [.2870] |
| 2.00 mm² | 1.70 ±0.05 [.067 ±.002 IN] | 8-354778-9 [.2940] |
| 1.50 mm² | 1.55 ±0.05 [.061 ±.002 IN] | 354779-2 [.3000] |
| 1.00 mm² | 1.40 ±0.05 [.055 ±.002 IN] | 1-354779-5 [.3065] |
| - | - | |
| - | - | |
| - | - | |
| - | - | |
| - | - | |
| - | - | |
| - | - | |
| - | - | |

1. RECOMMENDED SPARE PARTS.
2. GREASE RAM, CAM, CAM FOLLOWER AND FEED ROD LIGHTLY.
3. CERTAIN TERMINALS REQUIRE LUBRICATION. REFER TO THE APPLICATOR INSTRUCTION SHEET FOR MORE INFORMATION.
4. LUBRICATE DAILY PER THE APPLICATOR INSTRUCTION SHEET SUPPLIED WITH THE APPLICATOR.
5. CRIMP DATA SHOWN ON THIS LOG IS SPECIFICALLY FOR THE GERMAN MARKET.

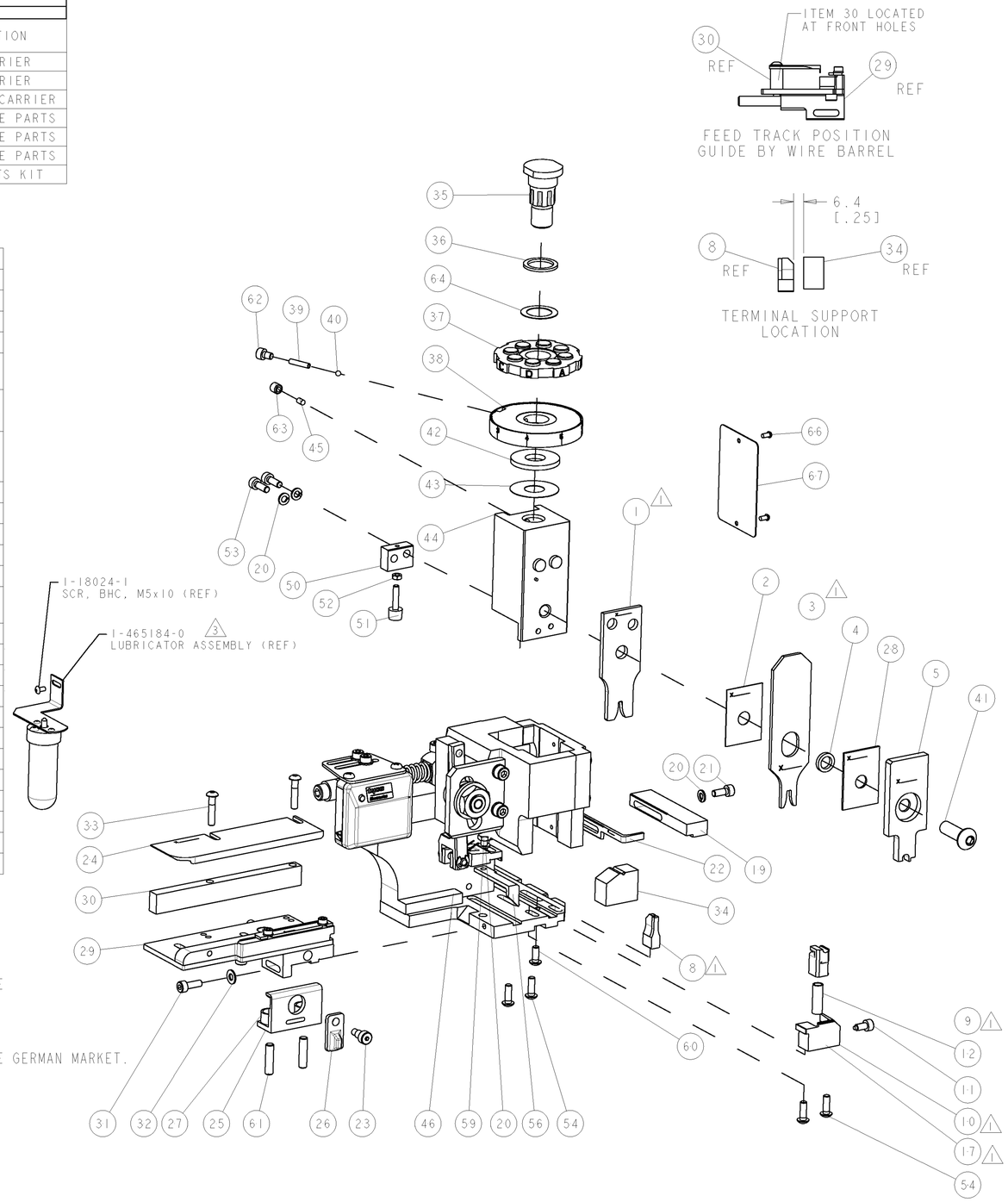


| | | | | | | | | | |
|---|---|---|---|---|---|---|---|---|---|
| - | - | - | - | - | - | - | - | - | 73 |
| - | - | - | - | - | - | - | - | - | 72 |
| - | 1 | 1 | 1 | 1 | 1 | 1 | 1338705-1 | DOCUMENTATION PACKAGE | 71 |
| - | - | - | - | - | - | - | - | - | 70 |
| - | - | - | - | - | - | - | - | - | 69 |
| - | - | - | - | - | - | - | - | - | 68 |
| - | 1 | 1 | 1 | 1 | 1 | 1 | 461264-1 | PLATE, IDENTIFICATION | 67 |
| - | 2 | 2 | 2 | 2 | 2 | 2 | 21017-2 | SCREW, DRIVE | 66 |
| - | - | - | - | - | - | - | - | - | 65 |
| - | 1 | 1 | 1 | 1 | 1 | 1 | 986950-1 | WASHER, FLAT PRECISION | 64 |
| - | 1 | 1 | 1 | 1 | 1 | 1 | 3-18031-0 | SCR, SET, CUP POINT M6 X 6.0 | 63 |
| - | 1 | 1 | 1 | 1 | 1 | 1 | 18023-9 | SCR, SKT HD CAP M4 X 6.0 | 62 |
| - | 2 | 2 | 2 | 2 | 2 | 2 | 2-18032-5 | SCR, SET, FLT POINT M5 X 20.0 | 61 |
| - | 1 | 1 | 1 | 1 | 1 | 1 | 18024-7 | SCR, BTN SKT HD CAP (M4 X 10.0) | 60 |
| - | 1 | 1 | 1 | 1 | 1 | 1 | 5-18022-2 | SCR, HEX HD CAP M4 X 8.0 | 59 |
| - | - | - | - | - | - | - | - | - | 58 |
| - | - | - | - | - | - | - | - | - | 57 |
| - | 1 | 1 | 1 | 1 | 1 | 1 | 1338685-1 | PAWL, FEED | 56 |
| - | - | - | - | - | - | - | - | - | 55 |
| - | 4 | 4 | 4 | 4 | 4 | 4 | 18024-8 | SCR, BTN SKT HD CAP (M4 X 12.0) | 54 |
| - | 2 | 2 | 2 | 2 | 2 | 2 | 1-18023-2 | SCR, SKT HD CAP M4 X 12.0 | 53 |
| - | 1 | 1 | 1 | 1 | 1 | 1 | 18030-1 | NUT, HEX, REG M3 | 52 |
| - | 1 | 1 | 1 | 1 | 1 | 1 | 811242-5 | BUMPER, HOLD DOWN | 51 |
| - | 1 | 1 | 1 | 1 | 1 | 1 | 690753-2 | SPACER, TONKER | 50 |
| - | 1 | 1 | 1 | 1 | 1 | 1 | 18024-3 | SCR, BTN SKT HD CAP (M3 X 10.0) | 49 |
| - | - | 1 | - | - | 1 | - | 1338675-1 | CAM, UNIVERSAL PRE FEED | 48 |
| - | 1 | - | 1 | 1 | - | 1 | 1338676-1 | CAM, UNIVERSAL POST-FEED | 47 |
| - | 1 | 1 | 1 | 1 | 1 | 1 | 1320999-3 | APPLICATOR SUBASSEMBLY, HDI | 46 |
| - | 1 | 1 | 1 | 1 | 1 | 1 | 690191-1 | PLUG,NYLON | 45 |
| - | 1 | 1 | 1 | 1 | 1 | 1 | 1338660-1 | RAM | 44 |
| - | 1 | 1 | 1 | 1 | 1 | 1 | 690125-1 | SHIM SUB-ASSY | 43 |
| - | 1 | 1 | 1 | 1 | 1 | 1 | 690124-1 | WASHER, RAM (.115) | 42 |
| - | 1 | 1 | 1 | 1 | 1 | 1 | 2-18024-6 | SCR, BTN SKT HD CAP (M8 X 25.0) | 41 |
| - | 1 | 1 | 1 | 1 | 1 | 1 | 23241-1 | BALL, STEEL | 40 |
| - | 1 | 1 | 1 | 1 | 1 | 1 | 2-22278-7 | SPRING, COMPRESSION | 39 |
| - | 1 | 1 | 1 | 1 | 1 | 1 | 1320922-1 | DISC, ADJUST, INSULATION CRIMP | 38 |
| - | 1 | 1 | 1 | 1 | 1 | 1 | 354777-1 | WIRE DISC, ASSEMBLY | 37 |
| - | 1 | 1 | 1 | 1 | 1 | 1 | 22480-5 | SPRING, COMPRESSION | 36 |
| - | 1 | 1 | 1 | 1 | 1 | 1 | 690212-1 | POST, RAM | 35 |
| - | 1 | 1 | 1 | 1 | 1 | 1 | 1424186-6 | SUPPORT, TERMINAL | 34 |
| - | 2 | 2 | 2 | 2 | 2 | 2 | 1-18024-0 | SCR, BTN SKT HD CAP (M4 X 20.0) | 33 |
| - | 1 | 1 | 1 | 1 | 1 | 1 | 18027-2 | WASHER, FLAT, REG M4 | 32 |
| - | 1 | 1 | 1 | 1 | 1 | 1 | 1-18023-2 | SCR, SKT HD CAP M4 X 12.0 | 31 |
| - | 1 | 1 | 1 | 1 | 1 | 1 | 1320908-8 | SPACER, STRIP GUIDE | 30 |
| - | 1 | 1 | 1 | 1 | 1 | 1 | 1633073-1 | STRIP GUIDE ASSEMBLY | 29 |
| - | 1 | 1 | 1 | 1 | 1 | 1 | 1-455888-0 | SPACER, CRIMPER | 28 |
| - | 2 | 2 | 2 | 2 | 2 | 2 | 1-22284-0 | SPRING, COMPRESSION | 27 |
| - | 1 | 1 | 1 | 1 | 1 | 1 | 356835-1 | LEVER, DRAG RELEASE | 26 |
| - | 1 | 1 | 1 | 1 | 1 | 1 | 240792-1 | DRAG, TERMINAL | 25 |
| - | 1 | 1 | 1 | 1 | 1 | 1 | 1320928-1 | PLATE, STRIP GUIDE | 24 |
| - | 1 | 1 | 1 | 1 | 1 | 1 | 980371-4 | SCR, SKT HD SHLDR 5.0 DIA X 6.0 | 23 |
| - | 1 | - | 1 | 1 | - | 1 | 690472-2 | STRIPPER | 22 |
| - | 1 | 1 | 1 | 1 | 1 | 1 | 1-18023-1 | SCR, SKT HD CAP M4 X 10.0 | 21 |
| - | 4 | 4 | 4 | 4 | 4 | 4 | 18025-2 | WASHER, SPRG LOCK, REG M4 | 20 |
| - | - | 1 | - | - | 1 | - | 1-690472-7 | STRIPPER | 19 |
| - | - | - | - | - | - | - | - | - | 18 |
| 1 - | 1 | - | - | 1 | - | - | 1338684-1 | SHEAR HOLDER, FRONT | 17 |
| - | - | - | - | - | - | - | - | - | 16 |
| - | - | - | - | - | - | - | - | - | 15 |
| - | - | - | - | - | - | - | - | - | 14 |
| - | - | - | - | - | - | - | - | - | 13 |
| - | 1 | 1 | 1 | 1 | 1 | 1 | 5-22280-0 | SPRING, COMPRESSION | 12 |
| - | 1 | 1 | 1 | 1 | 1 | 1 | 356885-4 | STOP, SHEAR | 11 |
| 1 - | - | 1 | 1 | - | 1 | 1 | 1320921-1 | SHEAR HOLDER, FRONT, CUT | 10 |
| 1 - | 1 | 1 | 1 | 1 | 1 | 1 | 462006-1 | FLOATING SHEAR, FRONT | 9 |
| 1 | 2 | 2 | 2 | 1 | 1 | 1 | 1633133-4 | ANVIL, COMBINATION .100 | 8 |
| - | - | - | - | - | - | - | - | - | 7 |
| - | - | - | - | - | - | - | - | - | 6 |
| - | 1 | 1 | 1 | 1 | 1 | 1 | 4-455889-4 | DEPRESSOR, SHEAR | 5 |
| - | 1 | 1 | 1 | 1 | 1 | 1 | 1-238011-0 | BLOCK, CRIMPER SPACER | 4 |
| 1 | 2 | 2 | 2 | 1 | 1 | 1 | 8-1424909-1 | CRIMPER, INSULATION F | 3 |
| - | 1 | 1 | 1 | 1 | 1 | 1 | 455888-3 | SPACER, CRIMPER | 2 |
| 1 | 2 | 2 | 2 | 1 | 1 | 1 | 2-1490019-1 | CRIMPER, WIRE PREMIUM | 1 |
| -77 | -76 | -72 | -71 | -6 | -2 | -1 | PART NO | DESCRIPTION | ITEM NO |

VIEW B ROTATED 180°

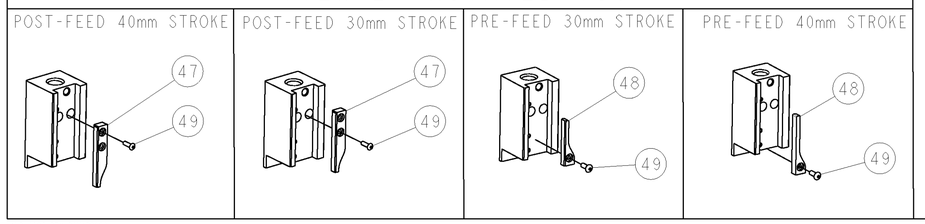


| | | | | | | | | | |
|---|---|---|---|---|---|---|---|---|---|
| - | - | - | - | - | - | - | - | - | 84 |
| - | - | - | - | - | - | - | - | - | 83 |
| - | - | - | - | - | - | - | - | - | 82 |
| - | - | - | - | - | - | - | - | - | 81 |
| - | - | - | - | - | - | - | - | - | 80 |
| - | - | - | - | - | - | - | - | - | 79 |
| - | - | - | - | - | - | - | - | - | 78 |
| - | - | - | - | - | - | - | - | - | 77 |
| - | - | - | - | - | - | - | - | - | 76 |
| - | - | - | - | - | - | - | - | - | 75 |
| - | - | - | - | - | - | - | - | - | 74 |
| -77 | -76 | -72 | -71 | -6 | -2 | -1 | PART NO | DESCRIPTION | ITEM NO |

THIS DRAWING IS A CONTROLLED DOCUMENT OF TYCO ELECTRONICS CORPORATION. IT IS SUBJECT TO CHANGE AND THE CONTROLLING ENGINEERING ORGANIZATION SHOULD BE CONTACTED FOR THE LATEST REVISION.

DIMENSIONS: mm [IN]

TOLERANCES UNLESS OTHERWISE SPECIFIED:
0 PLC ±
1 PLC ±
2 PLC ±
3 PLC ±
4 PLC ±
ANGLES ±

MATERIAL -
FINISH -

DWN L LOFTHOUSE 28-Nov-05
CHK -
APVD M C 28-Nov-05
PRODUCT SPEC -
APPLICATION SPEC See Table
WEIGHT -

tyco Electronics
Tyco Electronics
Harrisburg, PA 17105-3608

NAME SIDE FEED HDI APPLICATOR

SIZE A1 | CAGE CODE 00779 | DRAWING NO C-1426584 | RESTRICTED TO -

CUSTOMER DRAWING | SCALE 3:5 | SHEET 1 OF 1 | REV A

AMP 4805 REV 31MAR2000

Pro/ENGINEER DRAWING