THIS COPY IS PROVIDED ON A RESTRICTED BASIS AND IS NOT TO BE USED IN ANY WAY DETRIMENTAL TO THE INTERESTS OF PANDUIT CORP.

ASSEMBLY PART NUMBER	ITEM	QTY	DESCRIPTION	PART NUMBER
TDP43HET TDP46HET TDP43HET/E TDP46HET/E	1	1	300/600DPI PRINTER	TDP43HET TDP46HET TDP43HET/E TDP46HET/E
	2	1	EASY MARK PLUS LABELING SOFTWARE	EMPLUS-CD
	3	1	USB CABLE	USB CABLE
	4	1	THERMAL TRANSFER LINE CARD (BOOKLET)	IDLC08-SA-ENG
	5	1	WARRANTY CARD	GMLS1-REG
	6	1	DRIVER CD WITH USER MANUAL	A80523
	7	1	USER MANUAL, HARDCOPY	B20733
	8	1	MEDIA/RIBBON KNIFE	GMBLADE
	9	1	RIBBON ROLL (HYBRID)	RHEH4BL-S
	10	1	QUICK-START GUIDE, HARDCOPY	B20732
	11	1	PRINTER RECOMMENDATION SETTINGS, HARD COPY	B20748
TDP43/6HET	12	1	NORTH AMERICA POWER CORD	POWER CORD
TDP43HET/E		1	EUROPEAN & UK POWER CORDS	
TDP46HET/E		1		

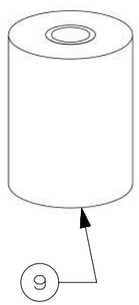

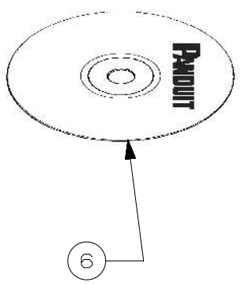

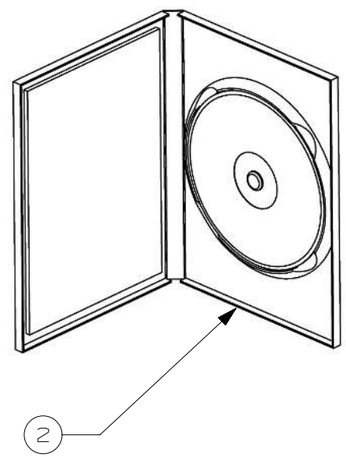

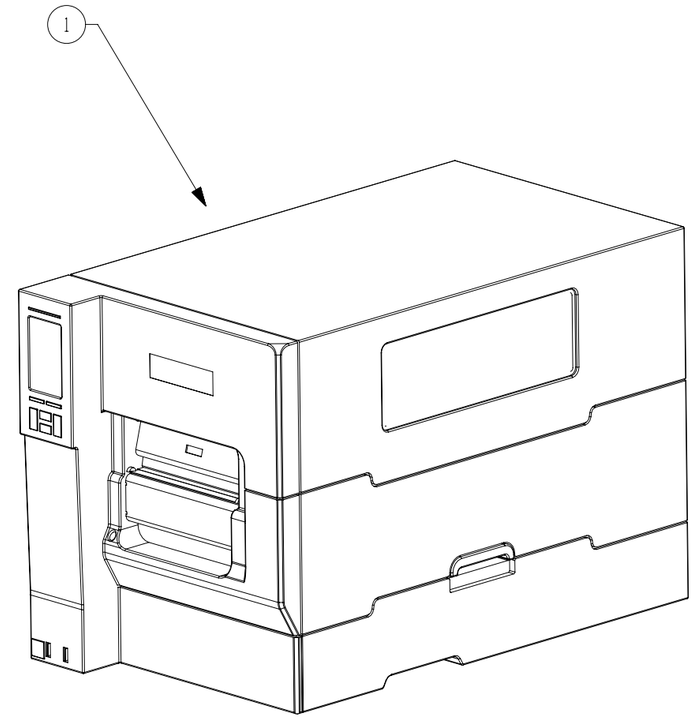

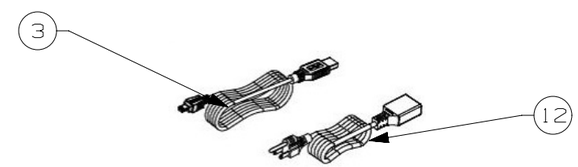

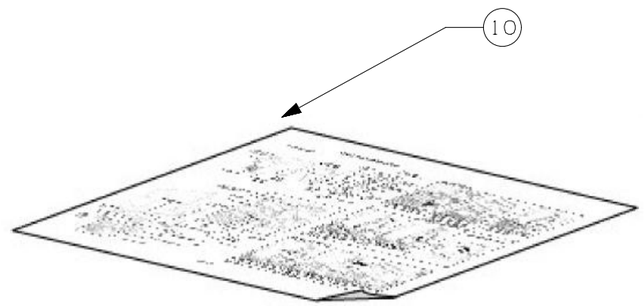

PRODUCT NOTES:
1) VISIT OUR ONLINE CATALOG AT WWW.PANDUIT.COM FOR A LIST OF CURRENT PARTS APPLICABLE FOR USE WITH THIS PRODUCT.
2) PRINTER WEIGHT IS 35 POUNDS.
3) PRINTER DIMENSIONS ARE 11"(W) X "13"(H) X 20"(L)

REV	DATE	BY	CHK	APR	DESCRIPTION	ECN
00	9-31-21	BMAG	MSAD	KJM	DRAWING RELEASE	GAECN088620

TITLE
TDP43HET, TDP46HET, TDP43HET/E, TDP46HET/E
INDUSTRIAL THERMAL TRANSFER PRINTER
CUSTOMER DRAWING

ITEM REVISION NAME: 01643NBB/00
DATASET FILE NAME: 01643NBB_DC

UNLESS OTHERWISE SPECIFIED, DIMENSIONAL TOLERANCES ARE: IN [mm]
.x ± .1 [2.54] .xxx ± .005 [.127]
.xx ± .01 [.25] ANGLES ± 5 °
THIRD ANGLE PROJECTION

MATERIAL: VARIOUS

DRAWING NUMBER: 01643NBB_DC

DRAWN BY	DATE	CHK	SCALE		SIZE
BMAG	9-31-21	MSAD	N/A	SHT 1 OF 1	B