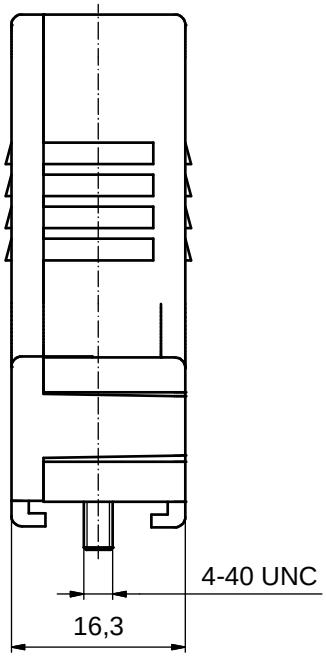

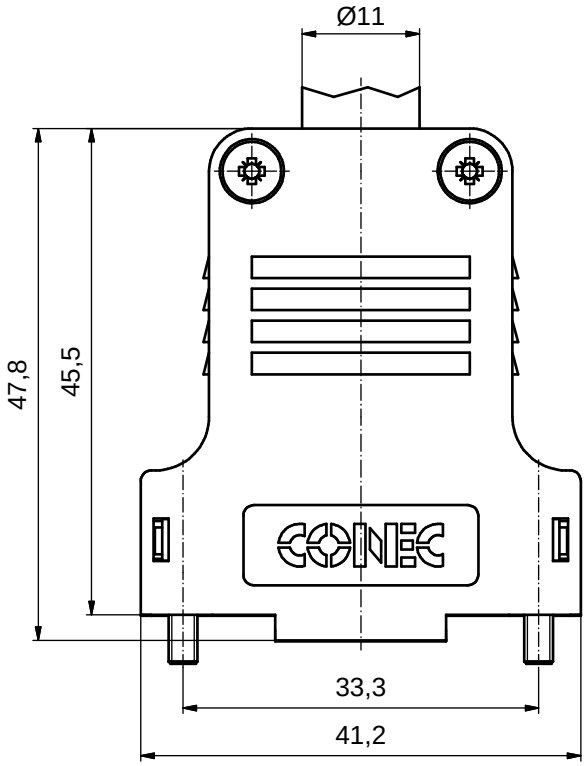

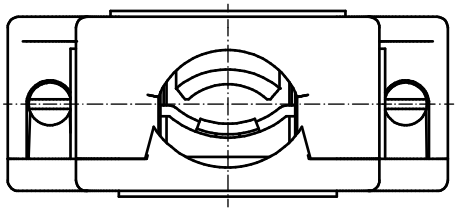

NOTES: (b)

1. HOOD + COVER: PBT UL 94 V-0; BLACK
2. CABLE STRAIN RELIEF: STEEL; NICKEL PLATED
3. PRESS INSERT: ABS UL 94 V-0; BLACK
4. SHORT SCREWS: STEEL; NICKEL PLATED
5. COVER SCREWS: STEEL; NICKEL PLATED
6. LENS HEAD SCREWS: STEEL; NICKEL PLATED

TECHNICAL DATA:

- TEMPERATURE RANGE: -40°C to + 125°C

(b)

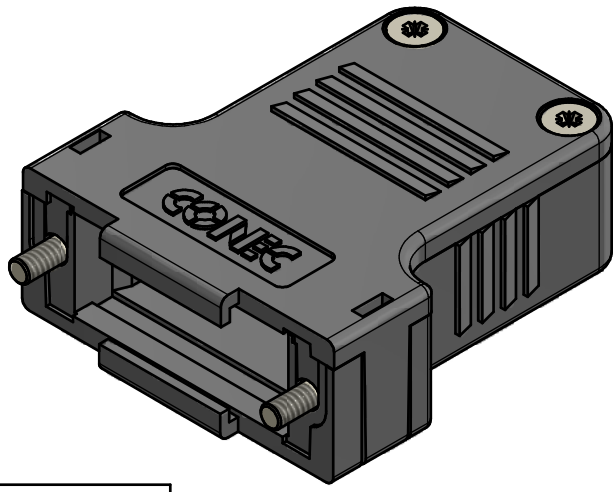

(b)

(b)

CABLE STRAIN RELIEF (1x)

LENS HEAD SCREW (2x)

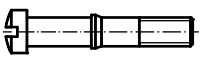

SHORT SCREW (2x)

PRESS INSERT (1x)

COVER SCREW (2x)

RoHS compliant

THIS DRAWING MAY NOT BE COPIED OR REPRODUCED IN ANY WAY, AND MAY NOT BE PASSED ON TO A THIRD PARTY WITHOUT WRITTEN PERMISSION. OWNERSHIP AND COPYRIGHT OF CONEC GmbH

DO NOT ALTER CAD DRAWING BY HAND

rev.	description	date	name
5 x b	Ä5607	14.04.15	M.H.
a	Original		

tolerance

dim. in mm

	date	name
drawn	14.04.2015	Heinrich
appd.	14.04.2015	Lehmenkühler
norm		
d-old	16K1A707	

CONEC®

scale: 2:1

material: SEE NOTES

title: PLASTIC HOOD
15pos.
with straight cable exit

dwg no: (b) 16K1A3619

DIN-A3

sh: 1

part no: 165X13379X / 600X10015XS (b)