NYLON 6/6 (RMS-01) COLOR: NATURAL. PART NO.	FLAME RET. (RMS-19) COLOR: NATURAL. PART NO.	DIM. "A" REF.	DIM. "B" REF.	HOLE DIA.	PANEL THICKNESS
MWS-1-01	MWS-1-19	.23 (5.8)	.12 (3.0)	.070±.002 (1.75±0.05)	.062 (1.57)
MWS1-1-01	MWS1-1-19				.093 (2.36)
----	MWS-2-19	.44 (11.2)	.33 (8.5)		.063 (1.60)
----	MWS-3-19				.087 (2.20)

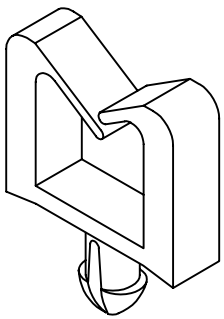

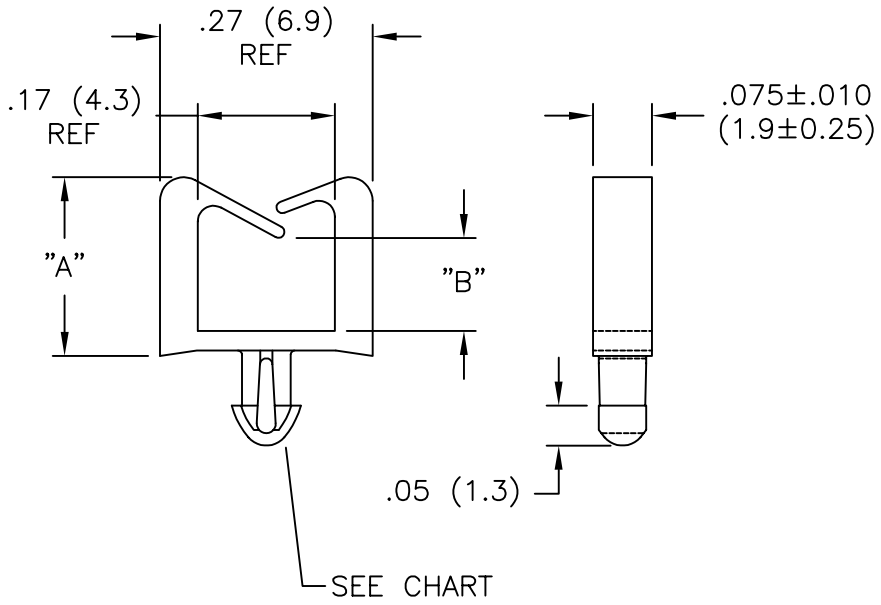

REV	DESCRIPTION	ENGR DATE
F	SEE ECN #887 FOR CHANGES	SM 12.13.04
E	UPDATED PRINT AND CHANGED FILE NO.	SM 05.29.01
D	REVISED TABLE	J.L 07.26.00
C	MAT'L RMS-19 ADDED	J.L 12.10.97
B	ADDED P/N MWS1 AND PUT IN CHART	JB 12.22.95
A	CONVERTED TO ACAD	PB 10.21.94

TITLE: MICRO WIRE SADDLE

DWG IN IN (MM)

TOLERANCES UNLESS NOTED
.XX=±.01
.XXX=±.005
FRAC=±1/64
ANG=±1°

FILE # MWS
MAT'L: SEE TABLE
RE: RICHCO, INC.

DWN: JL
DT: 07/26/00
CHKD:
ENG:

RICHCO INC.
ENG@RICHCO-INC.COM
(773) 539-4060

FINAL

PART # SEE TABLE

PRINT TYPE CA