THIS COPY IS PROVIDED ON A RESTRICTED BASIS AND IS NOT TO BE USED IN ANY WAY DETRIMENTAL TO THE INTERESTS OF PANDUIT CORP.

PANDUIT PART NUMBER	STUD SIZE	DIMENSIONS - in.					TOOLS
		A ± .020	W ± .010	C ± .015	M ± .020	H ±.010	
PV2-10RX	#10	1.94 (49.28)	.68 (17.27)	.58 (14.73)	1.60 (40.64)	.20 (5.08)	CT-720 (CD-720PV8-2) CT-2600 (CD-2600-PV2)
PV2-14RX	1/4"	1.94 (49.28)	.68 (17.27)	.58 (14.73)	1.60 (40.64)	.27 (6.86)	
PV2-56RX	5/16"	1.94 (49.28)	.68 (17.27)	.58 (14.73)	1.60 (40.64)	.33 (8.38)	
PV2-38RX	3/8"	1.94 (49.28)	.68 (17.27)	.58 (14.73)	1.60 (40.64)	.39 (9.91)	
PV2-12RX	1/2"	2.03 (51.56)	.86 (21.84)	.58 (14.73)	1.60 (40.64)	.52 (13.21)	

NOTES:

1. cULus LISTED FOR:
   A. 600V MAX VOLTAGE RATING
   B. 221° F (105° C) MAX TEMP RATING
   C. #2 AWG STRANDED COPPER WIRE
2. SEE WWW.PANDUIT.COM FOR PACKAGE QUANTITIES
3. MATERIAL:
   A. STAMPING - .060" (1.52) THK, COPPER TIN PLATED
   B. HOUSING - VINYL, RED
4. DIMENSIONS IN BRACKETS ARE IN MILLIMETERS
5. WIRE STRIP LENGTH: 1/2 + 1/32 [12.7 + .8]
   - 0 - 0

c UL us
LISTED
587H
E52164

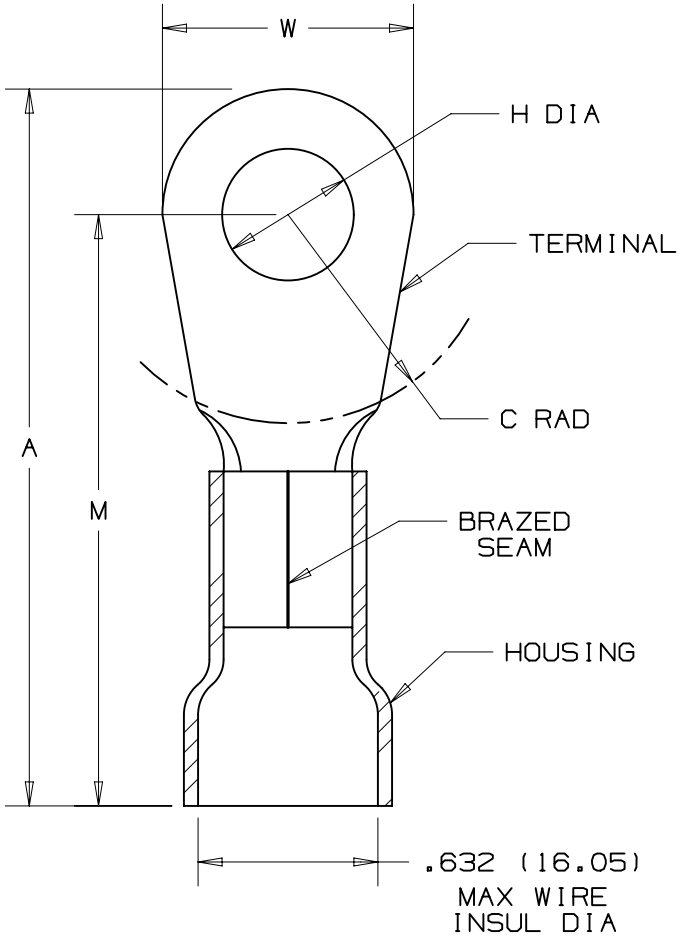

REV	DATE	BY	CHK	APR	DESCRIPTION	ECN
07	06/14	MBY	JHNU	RGB	REVISED UL LOGO TO cULus LOGO, REVISED NOTES, MOVED TOOLS TO TABLE, UPDATED BORDER	N41220-A41220

TITLE
#2 BARREL VINYL INSULATED RING TONGUE .632 (16.05) MAX. WIRE INSUL. DIAMETER

CUSTOMER DRAWING

ITEM REVISION NAME: N41220BA_A41220/07

DATASET FILE NAME: N41220BA_A41220/07

UNLESS OTHERWISE SPECIFIED, DIMENSIONAL TOLERANCES ARE: IN [mm]
.X ± .XXX ±
.XX ± ANGLES ±
THIRD ANGLE PROJECTION

MATERIAL: SEE NOTE 3

DRAWING NUMBER: A41220

DRAWN BY	DATE	CHK	SCALE	SHT 1 OF 1	SIZE
DAW			NONE		A

D10100DA/16