THIS DRAWING IS UNPUBLISHED. RELEASED FOR PUBLICATION 20
© COPYRIGHT 20 BY TYCO ELECTRONICS CORPORATION. ALL RIGHTS RESERVED.

PART NUMBER	REV	TERMINATOR	FEED TYPE	DESCRIPTION
1426663-1	A	LEADMAKER	MECH POST FEED	CUTS CARRIER
1426663-2	A	BENCH	MECH PRE FEED	CUTS CARRIER
1426663-6	A	LEADMAKER	MECH POST FEED	CONTINUOUS CARRIER
7-1426663-1	A	LEADMAKER	MECH POST FEED	-1 AND SPARE PARTS
7-1426663-2	A	BENCH	MECH PRE FEED	-2 AND SPARE PARTS
7-1426663-6	A	LEADMAKER	MECH POST FEED	-6 AND SPARE PARTS
7-1426663-7	A	-	-	SPARE PARTS KIT

SET UP GAGE 458637-3

LOC	DIST
A	66

REVISIONS

P	LTR	DESCRIPTION	DATE	DWN	APVD
	A	ECO-08-009263	14APR2008	MB	MC

CRIMP DATA WAGO TERMINAL TE CRIMP SPECS △5

TERMINAL NAME: FEMALE TERMINAL

CRIMP	SIZE	TYPE	RANGE
WIRE	2.03 [.080 IN]	F	0.75-1.50mm²
INSUL	3.05 [.120 IN]	O	1.70-2.50 [.067-.098 IN]

WIRE STRIP LENGTH 3.60-4.40 [.142-.173 IN]

APPL INSTRUCTIONS 408-8322

TERMINAL APPL SPEC - - - -

FEED 10.01 [.394 IN]

TERMINALS APPLIED

TE PN	MANUF'S PN	-	-
1949620-1	TAA190D1	-	-
-	-	-	-
-	-	-	-
-	-	-	-

WIRE SIZE	CRIMP HEIGHT	PIN PN & LENGTH [IN]
1.50mm²	1.57 ±0.05 [.062 ±.002 IN]	9-354778-7 [.2980]
1.00mm²	1.37 ±0.05 [.054 ±.002 IN]	1-354779-5 [.3065]
0.75mm²	1.27 ±0.05 [.050 ±.002 IN]	2-354779-2 [.3100]
-	-	
-	-	
-	-	
-	-	
-	-	
-	-	
-	-	
-	-	
-	-	

△1 RECOMMENDED SPARE PARTS.

2. GREASE RAM, CAM, CAM FOLLOWER AND FEED ROD LIGHTLY.

△3 CERTAIN TERMINALS REQUIRE LUBRICATION. REFER TO THE APPLICATOR INSTRUCTION SHEET FOR MORE INFORMATION.

4. LUBRICATE DAILY PER THE APPLICATOR INSTRUCTION SHEET SUPPLIED WITH THE APPLICATOR.

△5 ALL CRIMP DATA CALCULATED BY TYCO ELECTRONICS UK LTD.

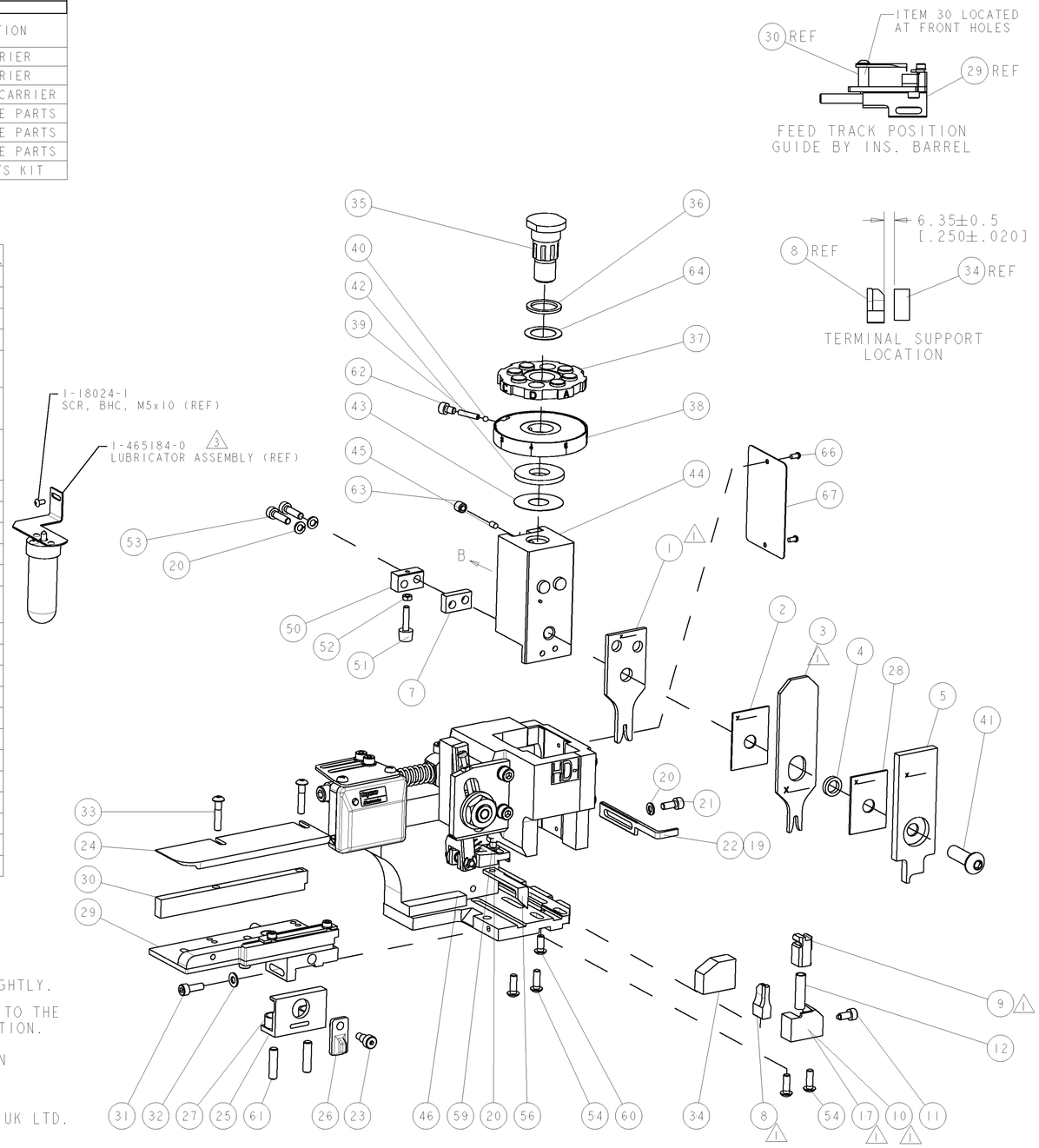

VIEW B ROTATED 180°

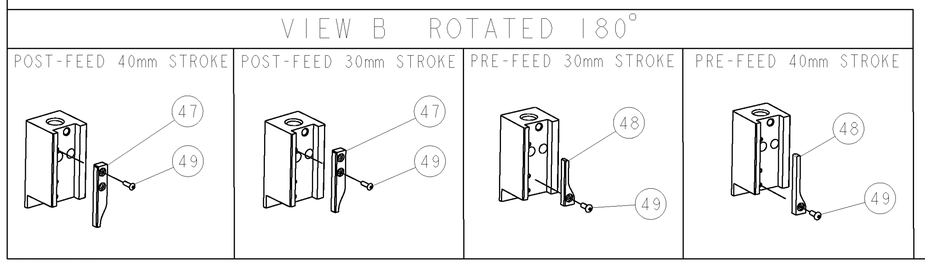

ITEM NO	DESCRIPTION	PART NO	-77	-76	-72	-71	-6	-2	-1
84	-	-	-	-	-	-	-	-	-
83	-	-	-	-	-	-	-	-	-
82	-	-	-	-	-	-	-	-	-
81	-	-	-	-	-	-	-	-	-
80	-	-	-	-	-	-	-	-	-
79	-	-	-	-	-	-	-	-	-
78	-	-	-	-	-	-	-	-	-
77	-	-	-	-	-	-	-	-	-
76	-	-	-	-	-	-	-	-	-
75	-	-	-	-	-	-	-	-	-
74	-	-	-	-	-	-	-	-	-

ITEM NO	DESCRIPTION	PART NO	-77	-76	-72	-71	-6	-2	-1
73	-	-	-	-	-	-	-	-	-
72	-	-	-	-	-	-	-	-	-
71	DOCUMENTATION PACKAGE	1338705-1	-	1	1	1	1	1	1
70	-	-	-	-	-	-	-	-	-
69	-	-	-	-	-	-	-	-	-
68	-	-	-	-	-	-	-	-	-
67	PLATE, IDENTIFICATION	461264-1	-	1	1	1	1	1	1
66	SCREW, DRIVE	21017-2	-	2	2	2	2	2	2
65	-	-	-	-	-	-	-	-	-
64	WASHER, FLAT PRECISION	986950-1	-	1	1	1	1	1	1
63	SCR, SET, CUP POINT M6 X 6.0	3-18031-0	-	1	1	1	1	1	1
62	SCR, SKT HD CAP M4 X 6.0	18023-9	-	1	1	1	1	1	1
61	SCR, SET, FLT POINT M5 X 20.0	2-18032-5	-	2	2	2	2	2	2
60	SCR, BTN SKT HD CAP (M4 X 10.0)	18024-7	-	1	1	1	1	1	1
59	SCR, HEX HD CAP M4 X 8.0	5-18022-2	-	1	1	1	1	1	1
58	-	-	-	-	-	-	-	-	-
57	-	-	-	-	-	-	-	-	-
56	PAWL, FEED	1338685-1	-	1	1	1	1	1	1
55	-	-	-	-	-	-	-	-	-
54	SCR, BTN SKT HD CAP (M4 X 12.0)	18024-8	-	4	4	4	4	4	4
53	SCR, SKT HD CAP M4 X 16.0	1-18023-3	-	2	2	2	2	2	2
52	NUT, HEX, REG M3	18030-1	-	1	1	1	1	1	1
51	BUMPER, HOLD DOWN	811242-5	-	1	1	1	1	1	1
50	SPACER, TONKER	690753-2	-	1	1	1	1	1	1
49	SCR, BTN SKT HD CAP (M3 X 10.0)	18024-3	-	1	1	1	1	1	1
48	CAM, UNIVERSAL PRE FEED	1338675-1	-	-	1	-	-	1	-
47	CAM, UNIVERSAL POST-FEED	1338676-1	-	1	-	1	1	-	1
46	APPLICATOR SUBASSEMBLY, HDI	1320999-3	-	1	1	1	1	1	1
45	PLUG,NYLON	690191-1	-	1	1	1	1	1	1
44	RAM	1338660-1	-	1	1	1	1	1	1
43	SHIM SUB-ASSY	690125-1	-	1	1	1	1	1	1
42	WASHER, RAM (.115)	690124-1	-	1	1	1	1	1	1
41	SCR, BTN SKT HD CAP (M8 X 25.0)	2-18024-6	-	1	1	1	1	1	1
40	BALL, STEEL	23241-1	-	1	1	1	1	1	1
39	SPRING, COMPRESSION	2-22278-7	-	1	1	1	1	1	1
38	DISC, ADJUST, INSULATION CRIMP	1320922-1	-	1	1	1	1	1	1
37	WIRE DISC, ASSEMBLY	354777-1	-	1	1	1	1	1	1
36	SPRING, COMPRESSION	22480-5	-	1	1	1	1	1	1
35	POST, RAM	690212-1	-	1	1	1	1	1	1
34	SUPPORT, TERMINAL	1320934-1	-	1	1	1	1	1	1
33	SCR, BTN SKT HD CAP (M4 X 20.0)	1-18024-0	-	2	2	2	2	2	2
32	WASHER, FLAT, REG M4	18027-2	-	1	1	1	1	1	1
31	SCR, SKT HD CAP M4 X 12.0	1-18023-2	-	1	1	1	1	1	1
30	SPACER, STRIP GUIDE	1-1320908-5	-	1	1	1	1	1	1
29	STRIP GUIDE ASSEMBLY	1633073-1	-	1	1	1	1	1	1
28	SPACER, CRIMPER	1-455888-0	-	1	1	1	1	1	1
27	SPRING, COMPRESSION	1-22284-0	-	2	2	2	2	2	2
26	LEVER, DRAG RELEASE	356835-1	-	1	1	1	1	1	1
25	DRAG, TERMINAL	240792-1	-	1	1	1	1	1	1
24	PLATE, STRIP GUIDE	1320928-1	-	1	1	1	1	1	1
23	SCR, SKT HD SHLDR 5.0 DIA X 6.0	980371-4	-	1	1	1	1	1	1
22	STRIPPER	690472-2	-	1	-	1	1	-	1
21	SCR, SKT HD CAP M4 X 10.0	1-18023-1	-	1	1	1	1	1	1
20	WASHER, SPRG LOCK, REG M4	18025-2	-	4	4	4	4	4	4
19	STRIPPER	690472-1	-	-	1	-	-	1	-
18	-	-	-	-	-	-	-	-	-
17	SHEAR HOLDER, FRONT	1338684-6	△1 -	1	-	-	1	-	-
16	-	-	-	-	-	-	-	-	-
15	-	-	-	-	-	-	-	-	-
14	-	-	-	-	-	-	-	-	-
13	-	-	-	-	-	-	-	-	-
12	SPRING, COMPRESSION	3-22280-3	-	1	1	1	1	1	1
11	STOP, SHEAR	356885-4	-	1	1	1	1	1	1
10	SHEAR HOLDER, FRONT, CUT	1-1320921-3	△1 -	-	1	1	-	1	1
9	FLOATING SHEAR, FRONT	454276-1	△1 -	1	1	1	1	1	1
8	ANVIL, COMBINATION .080	5-1633131-2	△1 1	2	2	2	1	1	1
7	SPACER	2-240641-9	-	1	1	1	1	1	1
6	-	-	-	-	-	-	-	-	-
5	DEPRESSOR, SHEAR	1-455889-4	-	1	1	1	1	1	1
4	BLOCK, CRIMPER SPACER	238011-4	-	1	1	1	1	1	1
3	CRIMPER, INSULATION O PREMIUM	1-456135-7	△1 1	2	2	2	1	1	1
2	SPACER, CRIMPER	455888-8	-	1	1	1	1	1	1
1	CRIMPER, WIRE PREMIUM	1-456405-6	△1 1	2	2	2	1	1	1

THIS DRAWING IS A CONTROLLED DOCUMENT FOR TYCO ELECTRONICS CORPORATION. IT IS SUBJECT TO CHANGE AND THE CONTROLLING ENGINEERING ORGANIZATION SHOULD BE CONTACTED FOR THE LATEST REVISION.

DIMENSIONS: mm [IN]

TOLERANCES UNLESS OTHERWISE SPECIFIED: 0 PLC ±- 1 PLC ±- 2 PLC ±- 3 PLC ±- 4 PLC ±- ANGLES ±-

MATERIAL - -

FINISH - -

DWN M.BETTISS 14FEB2008
CHK -
APVD M.CLIFFORD 14FEB2008
PRODUCT SPEC -
APPLICATION SPEC See Table
WEIGHT -

Tyco Electronics
Tyco Electronics
Harrisburg, PA 17105-3608

NAME SIDE FEED HDI APPLICATOR

SIZE A1 CAGE CODE 00779 DRAWING NO C-1426663 RESTRICTED TO -

CUSTOMER DRAWING SCALE 3:5 SHEET 1 OF 1 REV A

AMP 4805 REV 31MAR2000

Pro/ENGINEER DRAWING