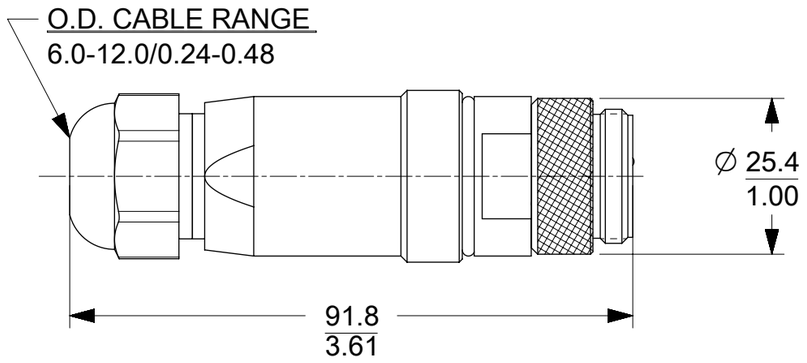

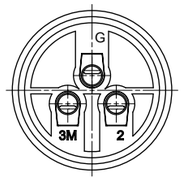

BACK SIDE
INSERT ONLY

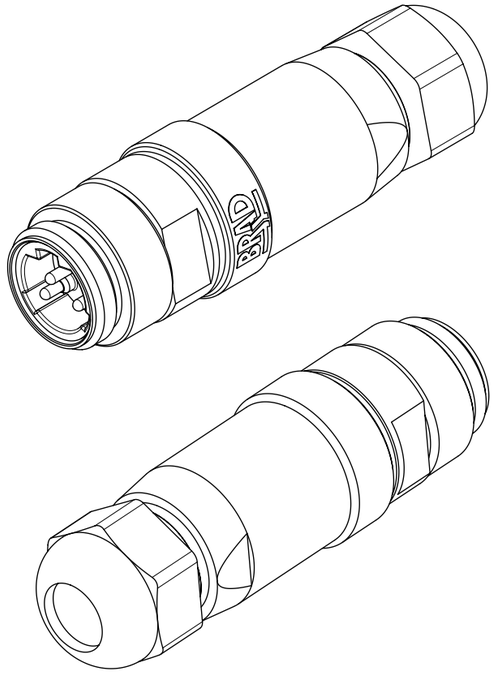

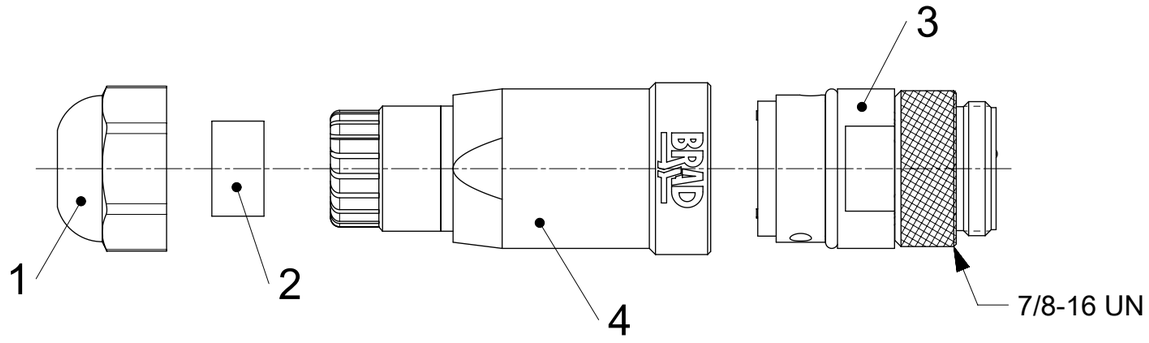

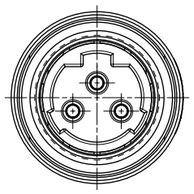

MALE FACE VIEW

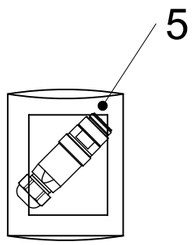

WIRING CHART

1	
2	
3	

NOTES:

1. MATERIAL: AS NOTED
2. FINISH: AS NOTED
3. ELECTRICAL:
   VOLTAGE: 500V PER IEC60664
   600V PER UL2237
   CURRENT: 15A
4. WIRE RANGE: 24 TO 14AWG
5. TEMP RATING: -20° TO +80°C
6. PROTECTION: IP67 (WHEN MATED)
7. ALL DIMS ARE FOR REFERENCE UNLESS NOTED OTHERWISE

CHART

PART NO.	ENGINEERING NO.
1300170062	1A3106-34PWR

BOM

ITEM	COMPONENT	MATERIAL	FINISH
1	HUT NUT PG 13.5	PA, BLACK	-
2	GASKET MO	NITRILE, BLACK	-
3	PLG MC 3P OC MA STR PA	-	-
4	SHELL PG13.5	PA, BLACK	-
5	POLYBAG 200x200x0.050	PE	-

THIS DRAWING CONTAINS INFORMATION THAT IS PROPRIETARY TO MOLEX ELECTRONIC TECHNOLOGIES, LLC AND SHOULD NOT BE USED WITHOUT WRITTEN PERMISSION

SYMBOLS: FA = 0, FC = 0, FB = 0, S = 0, ▼ = 0, C = 0, ☒ = 0, ■ = 0, ▽ = 0

DIMENSION UNITS: MM/INCH | SCALE: 1:1

GENERAL TOLERANCES (UNLESS SPECIFIED)
ANGULAR TOL ± °
4 PLACES ±
3 PLACES ±
2 PLACES ±
1 PLACE ±
0 PLACES ±

DRAFT WHERE APPLICABLE MUST REMAIN WITHIN DIMENSIONS

CURRENT REV DESC: BOM UPDATED

EC NO: 632285
DRWN: RSCHIEBER 2020/02/12
CHK'D: RSILLER 2020/02/17
APPR: RSILLER 2020/02/17

INITIAL REVISION:
DRWN: RSCHIEBER 2016/02/02
APPR: CBRUNS 2016/03/16

THIRD ANGLE PROJECTION | DRAWING: A3-SIZE | SERIES: 130017

molex

FA MC 3P 0C MA STR PG13.5 UNSH BK PA AU

PRODUCT CUSTOMER DRAWING

DOCUMENT NUMBER	DOC TYPE	DOC PART	REVISION
1300170062	PSD	000	A4

MATERIAL NUMBER	CUSTOMER	SHEET NUMBER
SEE CHART	GENERAL MARKET	1 OF 1

DOCUMENT STATUS	P1	RELEASE DATE	2020/02/17 13:25:32

FORMAT: master-tb-prod-A3
REVISION: H
DATE: 2018/01/18