DRAWING MADE IN THIRD ANGLE PROJECTION

680462 ⇔ 680462

/home/amp29062/appL

PART NUMBER	REV	FIRST USED
680462-1	A	122500-1
680462-2	A	565435-5
680462-3	A	354500-1
680462-4	A	122500-1 △6

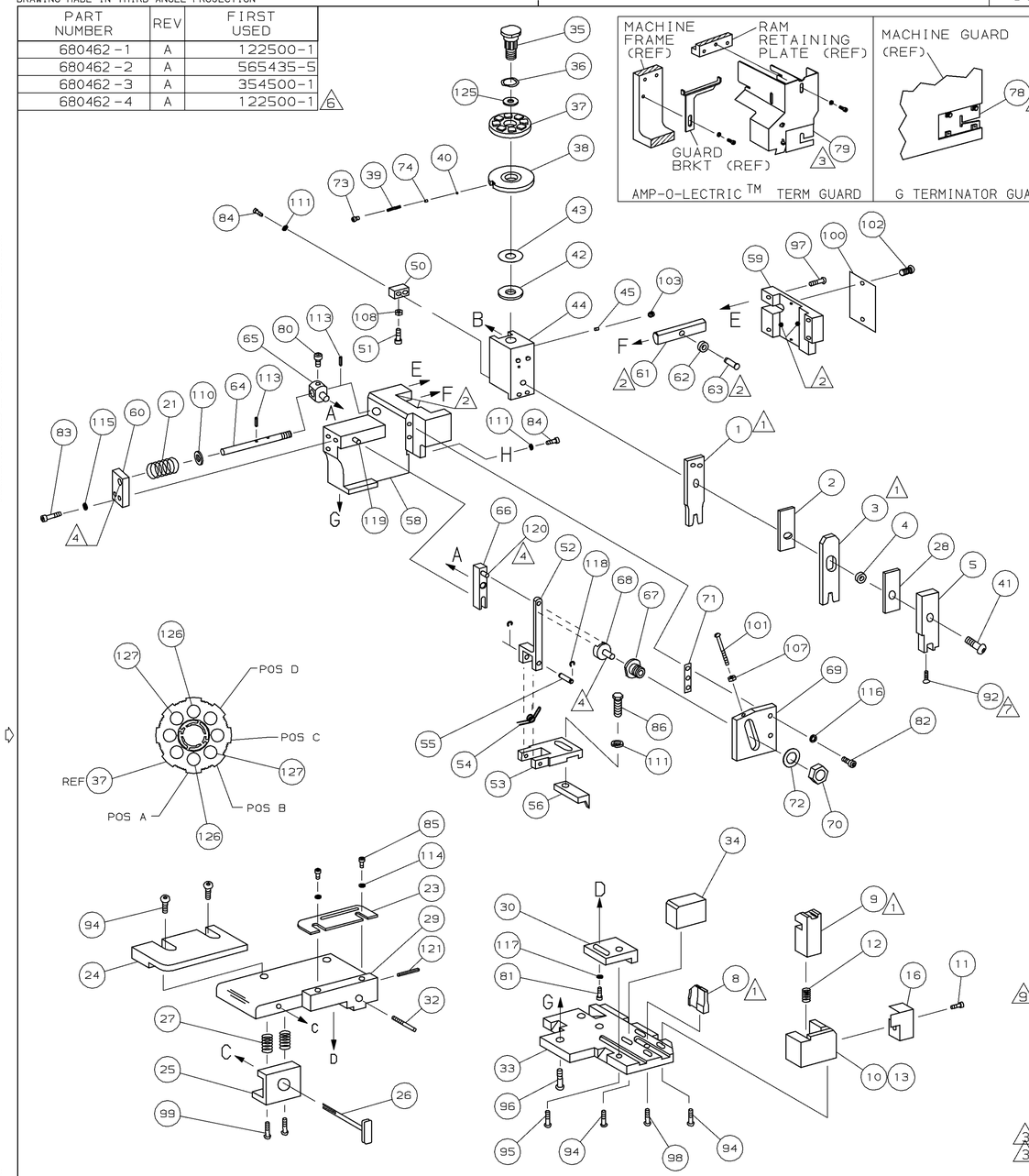

TERMINAL NAME: TAB CONTACT .070 TYPE

SEAL	TERMINAL
△8	282289

CRIMPING DATA

PAD LTR	CRIMP HEIGHT	WIRE SIZE
A	.060 ±.002 [1.52 ±0.05mm]	1.5 mm² △8
B	.057 ±.002 [1.45 ±0.05mm]	1 mm² △8
C	NOT	USED
D	NOT	USED

CRIMP	SIZE	TYPE	RANGE
WIRE	.090 [2.29mm]	F	1-1.5mm²
INSUL	.145 [3.68mm]	O	2.1-2.4mm

WIRE STRIP LENGTH	TERM APPL SPEC	FEED	APPL INSTRUCTION	SET UP GAGE	LAYOUT
.171-.188	114-20067	.469	408-8040	458637-1	L1929

-4	-3	-2	-1	U/M	DWG SIZE	PART NO	DESCRIPTION	ITEM NO
								129
								128
2	2	2	2	-	C	1-354779-2	PIN, WIRE DISC (.3050)B	127
2	2	2	2	-	C	354779-6	PIN, WIRE DISC (.3020)A	126
1	1	1	1	-	A	986950-1	WASHER, FLAT PRECISION	125
1	1	1	1	-	A	217238-1	GENERAL INSTRUCTION PACKAGE	124
1	1	1	1	-	-	4088040	SF APPL INST 408-8040	123
								122
1	1	1	1	-	A	4-21028-0	PIN,SLT SPR(ø.093x.75)ST GDE PL	121
REF	REF	REF	REF	-	A	1-21030-1	PIN,DOWEL(ø.187x.50)LEVER	120
REF	REF	REF	REF	-	A	1-21030-6	PIN,DOWEL(ø.187x1.25)HOUSING	119
REF	REF	REF	REF	-	A	21045-3	RING,RET "C"(ø.187)FD FING PIN	118
1	1	1	1	-	A	21024-5	WASHER, LOCK(#10)ADJ BLOCK	117
REF	REF	REF	REF	-	A	21024-5	WASHER,LOCK(#10)ADJ PLATE	116
REF	REF	REF	REF	-	A	21024-5	WASHER,LOCK(#10)FEED GDE ROD	115
2	2	2	2	-	A	21024-2	WASHER,LOCK(#4)FRONT STP GUIDE	114
REF	REF	REF	REF	-	A	5-21028-1	PIN,SLT SPR(ø.125x.50)ADJ ROD	113
								112
4	4	4	4	-	A	21024-4	WASHER,LOCK(#8)STRIPPER	111
REF	REF	REF	REF	-	A	21899-4	WASHER,FLAT(ø5/16)SCREW ADJ	110
								109
1	1	1	1	-	A	21018-5	NUT,HEX(NO.6)HOLDDOWN	108
REF	REF	REF	REF	-	A	21018-5	NUT,HEX(6-32)FEED ADJ	107
								106
								105
-	1	1	-	-	A	992031-1	PIN, CLEVIS	104
1	1	1	1	-	A	21009-2	SCR,SKT SET(1/4-20x.25 LW)RAM	103
2	2	2	2	-	A	21017-2	SCR,DRIVE(#2x.19)ID PLATE	102
REF	REF	REF	REF	-	A	6-23715-5	SCR,PAN HD(6-32x1.50)FEED ADJ	101
1	1	1	1	-	B	461264-1	PLATE, IDENTIFICATION	100
2	2	2	2	-	A	3-21002-0	SCR,BHC(10-32x.88)DRAG	99
1	1	1	1	-	A	22733-8	SCR,BHC(8-32x.38 LW)ANVIL	98
REF	REF	REF	REF	-	A	2-21002-9	SCR,BHC(10-32x.75)CAP	97
REF	REF	REF	REF	-	A	2-22733-8	SCR,BHC(1/4-20x.62)HOUSING	96
REF	REF	REF	REF	-	A	2-21002-7	SCR,BHC(10-32x.50)SG ADJ BLOCK	95
6	6	6	6	-	A	2-21002-2	SCR,BHC(8-32x.50)TERM H DWN	94
								93
1	1	1	1	-	A	1-21003-9	SCR,FHC(6-32x.38)DEP	92
1	1	1	1	-	A	1-21002-7	SCR,BHC(6-32x.38)CAM	91
								90
-	1	1	-	-	A	7-21000-9	SCR,SHC(4-40x.19)STRIPPER	89
								88
2	2	2	2	-	A	2-21000-7	SCR,SHC(8-32x.48)HOLD DOWN	87
1	1	1	1	-	A	2-22603-0	SCR,HEX HD(8-32x.31)FEED FINGER	86
2	2	2	2	-	A	1-21000-3	SCR,SHC(4-40x.25)F ST GUIDE	85
1	1	1	1	-	A	2-21000-7	SCR,SHC(8-32x.50)STRIPPER	84
REF	REF	REF	REF	-	A	3-21000-7	SCR,SHC(10-32x.75)FEED ROD GD	83
REF	REF	REF	REF	-	A	3-21000-6	SCR,SHC(10-32x.62)FD ADJ BLK	82
1	1	1	1	-	A	3-21000-4	SCR,SHC(10-32x.38)SG ADJ BL	81
REF	REF	REF	REF	-	A	3-21000-4	SCR,SHC(10-32x.38)PIVOT BLK	80
-	-	REF	-	-	B	455749-1	GUARD, WINDOW	79
-	REF	-	-	-	B	679532-1	INSERT, GUARD	78
								77
								76
								75
1	1	1	1	-	A	690603-1	SPRING, ASSIST	74
1	1	1	1	-	A	23030-1	SCR,SHC(6-32x.25 SL)INS DISC	73
REF	REF	REF	REF	-	A	458109-1	WASHER, SPECIAL	72
REF	REF	REF	REF	-	A	690517-1	SPACER	71

QTY REQD PER ASSY — PARTS LIST

-1	-2	-3	-4	U/M	DWG SIZE	PART NO	DESCRIPTION	ITEM NO
LEADMAKER	BENCH MODEL K	BENCH MODEL G	LEADMAKER					
MECH POST FEED	MECH PRE FEED	MECH PRE FEED	MECH POST FEED					
REF	REF	REF	REF	-	B	22594-8	NUT,HEX(1/2-20)	70
REF	REF	REF	REF	-	B	240628-1	PLATE, ADJUSTMENT	69
REF	REF	REF	REF	-	B	240626-1	SHAFT, PIVOT	68
REF	REF	REF	REF	-	B	240633-1	BUSHING	67
REF	REF	REF	REF	-	A	455680-1	LEVER, INTERMEDIATE	66
REF	REF	REF	REF	-	B	240629-1	BLOCK, PIVOT	65
REF	REF	REF	REF	-	A	240632-2	SCREW, ADJ FEED ROD	64
REF	REF	REF	REF	-	B	240659-3	PIN, CAM ROLLER	63
REF	REF	REF	REF	-	B	240658-1	ROLLER, CAM	62
REF	REF	REF	REF	-	B	454398-2	ROD, FEED	61
REF	REF	REF	REF	-	A	454178-1	GUIDE, FEED ROD	60
REF	REF	REF	REF	-	C	454220-1	CAP, RAM	59
REF	REF	REF	REF	-	D	454485-1	HOUSING	58
								57
1	1	1	1	-	B	690542-2	PAWL, FEED	56
REF	REF	REF	REF	-	B	240624-1	PIN, FEED FINGER	55
REF	REF	REF	REF	-	B	691499-1	SPRING, FEED FINGER	54
REF	REF	REF	REF	-	B	690541-1	HOLDER, FEED FINGER	53
REF	REF	REF	REF	-	A	455679-1	LEVER, TERMINAL FEED ARM	52
1	1	1	1	-	A	811242-2	BUMPER, HOLDDOWN	51
1	1	1	1	-	A	690753-1	SPACER, TONKER	50
-	1	-	-	-	B	690602-6	CAM, PRE-FEED 1 5/8 ST	49
-	-	1	-	-	B	690602-5	CAM, PRE-FEED 1 1/8 ST	48
1	-	-	1	-	B	690501-4	CAM, POST-FEED 1 5/8 ST	47
1	1	1	1	-	B	459456-1	APPLICATOR, BASIC (SUBASSY)	46
1	1	1	1	-	A	690191-1	PLUG, NYLON	45
1	1	1	1	-	C	455673-1	RAM	44
1	1	1	1	-	A	690125-1	WASHER, LAMINATED	43
1	1	1	1	-	A	690124-1	WASHER, RAM	42
1	1	1	1	-	A	7-21002-9	BOLT, CRIMPER(5/16x1.00)	41
1	1	1	1	-	A	23241-6	BALL, STEEL	40
1	1	1	1	-	A	690170-1	SPRING, COMPRESSION	39
1	1	1	1	-	C	690142-1	DISC, INSULATION	38
1	1	1	1	-	D	354777-1	WIRE DISC, PLASTIC	37
1	1	1	1	-	A	22480-5	WASHER, SPRING	36
1	1	1	1	-	B	690212-1	POST, RAM	35
1	1	1	1	-	B	690786-2	SUPPORT, TERMINAL	34
REF	REF	REF	REF	-	D	455675-1	PLATE, BASE	33
1	1	1	1	-	A	690432-3	SCREW, ADJUSTMENT	32
								31
REF	REF	REF	REF	-	B	455689-1	BLOCK, STRIP GUIDE ADJ	30
1	1	1	1	-	C	455671-1	PLATE, STRIP GUIDE	29
1	1	1	1	-	C	1-455888-9	SPACER, FRONT SHEAR DEP	28
2	2	2	2	-	A	1-22284-0	SPRING, DRAG	27
1	1	1	1	-	B	690546-1	LEVER, DRAG RELEASE	26
1	1	1	1	-	B	240792-1	DRAG, TERMINAL	25
1	1	1	1	-	D	9-690504-2	GUIDE, STRIP (REAR)	24
1	1	1	1	-	A	690438-1	GUIDE, STRIP (FRONT)	23
1	-	-	1	-	B	690472-2	STRIPPER	22
REF	REF	REF	REF	-	A	4-22284-9	SPRING, FEED RETURN	21
-	1	1	-	-	A	679218-1	STRIPPER WIRE STOP ASSY	20
-	1	1	-	-	B	458949-1	STRIPPER	19
								18
								17
1	1	1	1	-	B	318563-1	GUARD, CHIP, FRONT	16
								15
								14
1	-	-	-	-	C	679625-2	HOLDER, SHEAR(FRONT)	13
1	1	1	1	-	A	5-22280-0	SPRING, SHEAR	12
1	1	1	1	-	B	690461-2	STOP, SHEAR	11
-	1	1	1	-	C	1-690459-0	HOLDER, SHEAR (FRONT)	10
1	1	1	1	-	C	318707-1	SHEAR, FLOAT (FRONT)	9
1	1	1	1	-	C	1-662187-3	ANVIL	8
								7
								6
1	1	1	1	-	C	318701-1	DEPRESSOR, SHEAR (FRONT)	5
1	1	1	1	-	B	2-238011-2	SPACER, BLOCK CRIMPER	4
1	1	1	1	-	C	3-683454-2	CRIMPER, INSULATION	3
1	1	1	1	-	C	455888-8	SPACER, CRIMPER	2
1	1	1	1	-	C	2-456406-3	CRIMPER, WIRE	1

QTY REQD PER ASSY — PARTS LIST

REVISION OF EACH ASSY NO (WHEN BLANK, USE DWG REVISION)

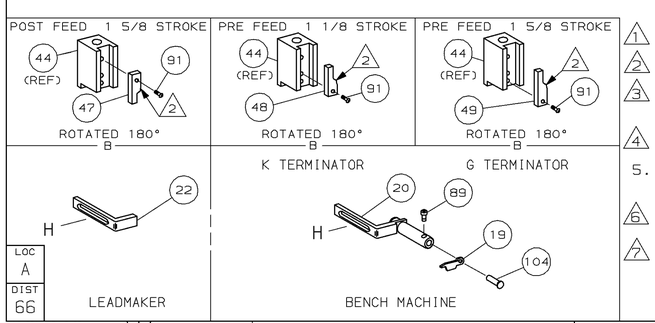

△1 RECOMMENDED SPARE PARTS.

△2 GREASE LIGHTLY.

△3 GUARD MUST BE IN PLACE WHEN OPERATING APPLICATOR IN A BENCH MACHINE.

△4 LUBRICATE DAILY USING NO. 20 MACHINE OIL.

5. ITEMS WITH QTY OF REF SPECIFIED (EXCEPT ITEMS 78 AND 79) ARE USED ON ITEM 46.

△6 THIS APPLICATOR DOES NOT CUT-UP THE CARRIER STRIP.

△7 APPLY TORQ-SEAL IN ALLEN SOCKET TO FILL HOLE AFTER FLAT HD HAS BEEN ADJUSTED TO CORRECT HEIGHT AT QUALIFICATION. APPLY #1-23419-5 LOC-TITE TO THREADS.

△8 USE SEAL 828905-1 FOR 1.5mm² WIRE
USE SEAL 828904-1 FOR 1 mm² WIRE.

△9 CUT TO LENGTH AT ASSY.

P	F	LTR	REVISION RECORD	APP	DATE
		A	REVISED	CE	7/97

DIMENSIONS IN INCHES.
DO NOT SCALE PRINT.
TOLERANCES UNLESS OTHERWISE SPECIFIED:
2 PLC DEC ±-
3 PLC DEC ±-
4 PLC DEC ±-
ANGLES ± -
SURF TEXTURE: √
REMOVE BURRS, BREAK SHARP EDGES R.015 MAX

MATL - -	HT TR - -	FIN - -	
DR L.COLLINS 20MAY97	APP J.HIRNEISEN 20MAY97	AMP Incorporated Harrisburg, PA 17105-3608	
CHK C. ERISMAN 20MAY97	REL - -		
NAME SIDE FEED HDM APPLICATOR		MACHINE REF MINI APPL	
SCALE -	D	DWG NO 680462	SHEET 1 OF 1	REV A

THIS DRAWING IS A CONTROLLED DOCUMENT FOR AMP INCORPORATED. IT IS SUBJECT TO CHANGE AND THE CONTROLLING ENGINEERING ORGANIZATION SHOULD BE CONTACTED FOR THE LATEST REVISION.

THIS INFORMATION IS CONFIDENTIAL AND IS DISCLOSED TO YOU ON CONDITION THAT NO FURTHER DISCLOSURE IS MADE BY YOU TO OTHER THAN AMP PERSONNEL WITHOUT WRITTEN AUTHORIZATION FROM AMP INCORPORATED, HARRISBURG, PA.