© 2021 TE Connectivity. ALL Rights Reserved.

REVISIONS					
F	LTR	DESCRIPTION	DATE	DWN	APVD
	B12	CORRECTION INSUL-HEIGHT FOR PN 1862029-5	27MAY2021	JJH	JCB
	B13	REVISION MISMACTH RESOLVED	08SEP2021	KMD	JCB
	B14	OBSOLETED PN 927840-4, 1241818-5	19MAR2022	KMD	JC
	B15	ADDED 1862029-1, 1862028-1/5 VARIANTS	09MAY2023	KMD	SCK

B15

-	-	-	-	-	-	1862028-5	A	CuFe2	PRESILVERED vorversilbert 1/2	VERSION A	0.75 - 1 FLR	E = 2.9 G = 3.2 D_{br} = 1.1	H = 3.9 K = 4.1 D_{br} = 1.8	0.75mm² = 1.39 1mm² = 1.46 0.75mm² = 1.39 1mm² = 1.46	MQC- Applicator 2837771-2	-	3	4.2	5.8	19.5	0.4
-	-	-	-	-	-													
-	-	-	-	-	-	1862028-1			PRETINNED vorverzinnt									
-	-	-	-	-	-													
-	-	-	-	-	-	1862029-5	A	CuFe2	PRESILVERED vorversilbert 1/2		0.35 - 0.5 FLR	E = 2.37 G = 2.45 D_{br} = 0.8	H = 2.8 K = 3.1 D_{br} = 1.4	0.5mm² = 1.14 0.35mm² = 1.09 0.5mm² = 1.14 0.35mm² = 1.09	MQC- Applicator 2837770-2	-	2.5	3.8	6.6	19.5	8 0.3
-	-	-	-	-	-													
-	-	-	-	-	-	1862029-1			PRETINNED vorverzinnt									
-	-	-	-	-	-													
-	-	-	-	-	-	-	-	-	-		0.2 - 0.5 FLK	E = 2.2 G = 2.2 D_{br} = 0.8	H = 3.7 K = 3.8 D_{br} = 2.0	0.20mm² = 1.13 0.25mm² = 1.15 0.35mm² = 1.19 0.50mm² = 1.26	MQC- Applicator 878426-2	539635-1 WITH DIE: mit Matrize 539744-2	2.5	3.8	6.6	19.5	8 0.3
-	-	-	-	-	-	-	-	-	-									
-	-	927839-2	C	-	-	-	-	CuSn4	PRETINNED vorverzinnt									
-	-	927839-1	C	-	-	-	-	CuFe2										
-	-	-	-	927827-2	C	-	-	CuSn4	PRETINNED vorverzinnt		0.5 - 1.0 FLK	E = 2.8 G = 3.0 D_{br} = 1.1	H = 4.5 K = 4.7 D_{br} = 2.4	0.5mm² = 1.38 0.75mm² = 1.47 1.0mm² = 1.56	MQC- Applicator 2-541689-2	539733-2 WITH DIE: mit Matrize 734249-0	3	4.2	5.8	19.5	0.4
-	-	-	-	927827-1	C	-	-	CuFe2										
-	-	-	-	927833-5	D	-	-	CuFe2	2		>1.0 - 2.5 FLK	E = 3.8 G = 4.1 D_{br} = 1.6	H = 5.7 K = 5.8 D_{br} = 3.6	1.5mm² = 1.76 2.0mm² = 1.90 2.5mm² = 2.04	MQC- Applicator 878367-2	539635-1 WITH DIE: mit Matrize 539733-2	3.5	4.7	6.3	19.5	0.4
-	-	-	-	927833-2	D	-	-	CuSn4	PRETINNED vorverzinnt									
-	-	-	-	927833-1	D	-	-	CuFe2										
927824-2	C	-	-	-	-	-	-	CuSn4	PRETINNED vorverzinnt		>2.5 - 4.0 FLK	E = 4.6 G = 4.8 D_{br} = 2.4	H = 6.3 K = 6.6 D_{br} = 4.0	3.0mm² = 2.13 3.5mm² = 2.24 4.0mm² = 2.35	MQC- Applicator 2-878314-2	539635-1 WITH DIE: mit Matrize 539734-2	4	5.2	6.8	19.5	0.6
927824-1	C	-	-	-	-	-	-	CuFe2										
13 63709-5	C	-	-	-	-	-	-	CuFe2	vorversilbert PRESILVERED 2		4.0 - 6.0 FLK	E = 5.2 G = 5.5 D_{br} = 2.9	H = 7.3 K = 7.6 D_{br} = 4.5	4.0mm² = 2.17 5.0mm² = 2.36 6.0mm² = 2.55	MQC- Applicator 2-878738-2	-	4.2	5.6	7.7	20 / 20.4	0.6
-	-	-	-	-	-	-	-	-	-									
-	-	-	-	-	-	-	-	-	-									
13 63709-2	C	-	-	-	-	-	-	CuSn4	vorverzinnt PRETINNED									
13 63709-1	C	-	-	-	-	-	-	CuFe2										
-	-	-	-	-	-	-	-	-	-		0.2 - 0.5 FLR	E = 2.2 G = 2.2 D_{br} = 0.8	H = 2.8 K = 2.8 D_{br} = 1.4	0.2mm² = 1.13 0.35mm² = 1.19 0.5mm² = 1.26	MQC- Applicator 878427-2	-	2.5	3.8	6.6	19.5	8 0.3
1 1241818-5	B	-	-	-	-	-	-	CuFe2	2									
1241818-1	B	-	-	-	-	-	-	CuFe2	vorverzinnt PRETINNED									
-	-	927840-5	C	-	-	-	-	CuFe2	vorversilbert PRESILVERED 2		0.5 - 1.0 FLR	E = 2.8 G = 3.0 D_{br} = 1.1	H = 3.9 K = 4.1 D_{br} = 1.8	0.5mm² = 1.43 0.75mm² = 1.52 1.0mm² = 1.61	MQC- Applicator 878328-2	169400-0 WITH DIE: mit Matrize 734781-1	3	4.2	5.8	19.5	0.4
-	-	12 927840-4	C	-	-	-	-	CuSn4										
-	-	-	-	-	-	-	-	-	-									
-	-	927840-2	C	-	-	-	-	CuSn4	vorverzinnt PRETINNED									
-	-	927840-1	C	-	-	-	-	CuFe2										
-	-	-	-	12 1-927831-5	C	-	-	CuFe2	1		>1.0 - 2.5 FLR	E = 3.8 G = 4.1 D_{br} = 1.6	H = 4.8 K = 4.9 D_{br} = 2.6	1.25mm² = 1.69 1.5mm² = 1.76 2.0mm² = 1.90 2.5mm² = 2.04	MQC- Applicator 878356-2	169400-0 WITH DIE: mit Matrize 734251-0	3.5	4.7	6.3	19.5	0.4
-	-	-	-	927831-5	C	-	-	CuFe2	vorversilbert PRESILVERED 2									
-	-	-	-	927831-4	C	-	-	CuSn4										
-	-	-	-	-	-	-	-	-	-									
-	-	-	-	927831-2	C	-	-	CuSn4	vorverzinnt PRETINNED									
-	-	-	-	927831-1	C	-	-	CuFe2										
-	-	-	-	12 1-927837-5	D	-	-	CuFe2	1		>2.5 - 4.0 FLR	E = 4.6 G = 4.8 D_{br} = 2.4	H = 5.5 K = 5.7 D_{br} = 3.3	3.0mm² = 2.13 3.5mm² = 2.24 4.0mm² = 2.35	MQC- Applicator 2-878384-2	169400-0 WITH DIE: mit Matrize 734251-0	4	5.2	6.8	19.5	0.6
-	-	-	-	927837-6	D	-	-	CuFe2	4									
-	-	-	-	927837-5	D	-	-	CuFe2	vorversilbert PRESILVERED 2									
-	-	-	-	927837-4	D	-	-	CuSn4										
-	-	-	-	-	-	-	-	-	-									
-	-	-	-	927837-2	D	-	-	CuSn4	vorverzinnt PRETINNED									
-	-	-	-	927837-1	D	-	-	CuFe2										
12 1-927829-5	D	-	-	-	-	-	-	CuFe2	1									
927829-5	D	-	-	-	-	-	-	CuFe2	2									
927829-2	D	-	-	-	-	-	-	CuSn4	vorverzinnt PRETINNED									
927829-1	D	-	-	-	-	-	-	CuFe2										

-	-	-	-	2-927836-2	C	-	-	CuSn4	5	VERSION B	0.5 - 1.0 FLR	E = 2.8 G = 3.0 D_{br} = 1.1	H = 7.6 K = 7.7 D_{br} = 5.6	0.5mm² = 1.43 0.75mm² = 1.52 1.0mm² = 1.61	MQC- Applicator 878337-2	539635-1 WITH DIE: mit Matrize 739736-2	3	5.4	7.2	20	1.25	963243-1 963244-1	100132-1
-	-	-	-	-	-	-	-	-	-									
-	-	-	-	927836-2	C	-	-	CuSn4	vorverzinnt PRETINNED									
-	-	-	-	927836-1	C	-	-	CuFe2										
-	-	-	-	2-927835-2	C	-	-	CuSn4	5		>1.0 - 2.5 FLR	E = 3.8 G = 4.1 D_{br} = 1.6	H = 7.6 K = 7.7 D_{br} = 5.6	1.5mm² = 1.76 2.0mm² = 1.90 2.5mm² = 2.04	MQC- Applicator 878338-2	539635-1 WITH DIE: mit Matrize 539736-2	3.5	5.9	7.7	20	1.25	963244-1 963245-1	100132-1
-	-	-	-	2-927835-1	C	-	-	CuSn4	6									
-	-	-	-	1-927835-3	C	-	-	CuFe2	6									
-	-	-	-	-	-	-	-	-	-									
-	-	-	-	927835-2	C	-	-	CuSn4	vorverzinnt PRETINNED									
-	-	-	-	927835-1	C	-	-	CuFe2										
2-928966-2	D	-	-	-	-	-	-	CuSn4	5		>2.5 - 4.0 FLR	E = 4.6 G = 4.8 D_{br} = 2.4	H = 7.6 K = 7.7 D_{br} = 5.6	3.0mm² = 2.13 - 4.0mm² = 2.35	MQC- Applicator 878441-2	539635-1 WITH DIE: mit Matrize 539736-2	4	5.9	7.7	20	1.25	963245-1	100132-1
2-928966-1	D	-	-	-	-	-	-	CuSn4	6									
1-928966-3	D	-	-	-	-	-	-	CuFe2	6									
-	-	-	-	-	-	-	-	-	-									
928966-2	D	-	-	-	-	-	-	CuSn4	vorverzinnt PRETINNED									
928966-1	D	-	-	-	-	-	-	CuFe2										
1241962-1	B	-	-	-	-	-	-	CuFe2	vorverzinnt PRETINNED		>3.0 - 5.0 FLR	E = 4.8 G = 5.2 D_{br} = 2.5	H = 8.15 K = 7.8 D_{br} = 6.0	3.0mm² = 2.25 4.0mm² = 2.50 5.0mm² = 2.75	MQC- Applicator -	- WITH DIE: mit Matrize	4	5.9	7.7	20	1.25	967011-1 963245-1	100132-1
TE Connectivity ORDER - NO	REV	TE Connectivity ORDER - NO	REV	TE Connectivity ORDER - NO	REV	TE Connectivity ORDER - NO	REV	MATERIAL Werkstoff	SURFACE Oberflaeche		DGB WIRE RANGE (mm²)	WIRE CRIMP Drahtcrimp	INSUL-CRIMP Isol - crimp	CRIMP HEIGHT Crimp-Hoehe	APPLICATION TOOL Anschlag-WKZ	HAND TOOL Handzange	A	B	C	D	E	SINGLE WIRE SEAL Einzeldichtung	DEAD END PLUG Blindstopfen
STRIP FORM Bandware (SERRATION DESIGN - 1)		STRIP FORM Bandware (SERRATION DESIGN - 2)		STRIP FORM Bandware (SERRATION DESIGN - 3)		STRIP FORM Bandware (SERRATION DESIGN - 4)						SRTIP FORM / Bandware		CRIMP DIMENSIONS (mm) Crimpabmessungen (mm)	EXTRACTION TOOL Ausdrueckwerkzeug Nr.:726503-1							TE CONNECTIVITY ORDER - No. 7	

1 CONTACT ZONE SELECTIVE
PRE SILVER PLATED MIN 3-4.5 µm
Kontaktzone selektiv
vorversilbert min. 3-4.5 µm

2 CONTACT ZONE SELECTIVE
PRE SILVER PLATED MIN 1-1.5 µm
Kontaktzone selektiv
vorversilbert min. 1-1.5 µm

3 CONTACT BODY: ELECTRO TIN PLATED OVER NICKEL
CONTACT AREA: GOLD PLATED
Kontaktkoerper: gal. verzinnt ueber Nickel
Kontaktzone: vergoldet

4 CONTACT BODY: ELECTRO TIN PLATED OVER NICKEL
CONTACT AREA: SELECTIVE NICKEL PLATED 2-4 µm
Kontaktkoerper: gal. verzinnt ueber Nickel
Kontaktzone: selektiv vernickelt 2-4 µm

5 CONTACT BODY: ELECTRO TIN PLATED OVER NICKEL
TOUCHING AREA TO CANTILEVER SPRING:
SELECTIVE AU PLATED OVER NICKEL
CANTILEVER SPRING: COMPLETELY AU PLATED
Kontaktkoerper: gal. verzinnt ueber Nickel
Anlageflaeche zur Ueberfeder
selektiv Au ueber Ni beschichtet
Ueberfeder: komplett Au beschichet

6 CONTACT BODY: ELECTRO TIN PLATED OVER NICKEL
TOUCHING AREA TO CANTILEVER SPRING AND CONTACT AREA
SELECTIVE AU PLATED OVER NICKEL
CANTILEVER SPRING: COMPLETELY AU PLATED
Kontaktkoerper: gal. verzinnt ueber Nickel
Anlageflaeche zur Ueberfeder Kontaktzone
selektiv Au ueber Ni beschichtet
Ueberfeder: komplett Au beschichet

7 PRE-FORM ISO-AREA
ONLY FOR PN: 1241962-1
Isoflanken vorgeformt
nur bei PN:1241962-1

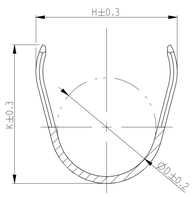

B-B

8 WRAP CRIMP
ONLY FOR PN: 927839.927840.928989 AND 928990
Umfassungscrimp
nur bei PN: 927839.927840.928989 und 928990

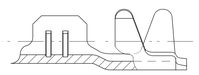

9 TRANSITION ONLY FOR PN 927827.927828.927829.
927830.927833.927834.927837 AND 927838
Uebergang nur fuer PN 927827.927828.927829.
927830.927833.927834.927837 und 927838

10 1-3 µm Sn28M LAYER FOR HIGHER
TEMPERATURE REQUIREMENTS
1-3 µm Sn28M Schicht fuer hoehere
Temperaturanforderungen

11 DOTTED LINE IS ALTERNATIVE SHAPE
Gestrichelte Linie alternative Form

12 OBSOLETE

13 SEE APPLICATION SPEC. FOR PREFERRED STANDARD TO MEET NEW REQUIREMENT
LV214-2 SLOW MOTION BENDING TEST
Siehe Verarbeitungs Spezifikation fuer bevorzugten Standard um den neuen
Anforderungen der LV214-2 Slow Motion Pruefung zu genuegen

VERSION A
(UNSEALED / ungedichtet)

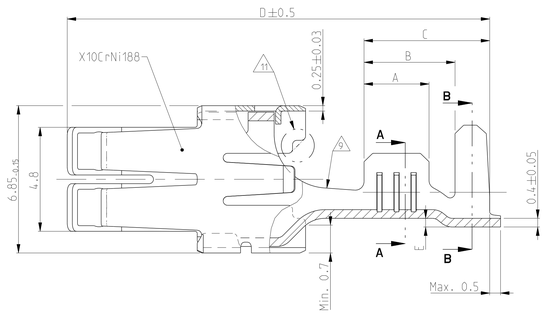

SERRATION DESIGN - 3

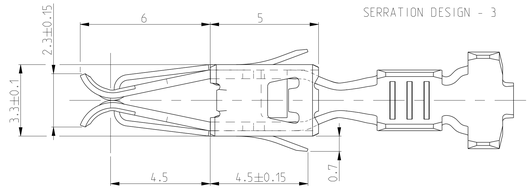

SERRATION DESIGN - 1

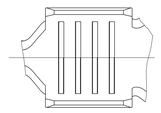

SERRATION DESIGN - 2

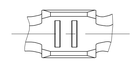

SERRATION DESIGN - 4

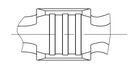

VERSION B
(SINGLE WIRE SEAL/
Einzel-Dichtungs-System)

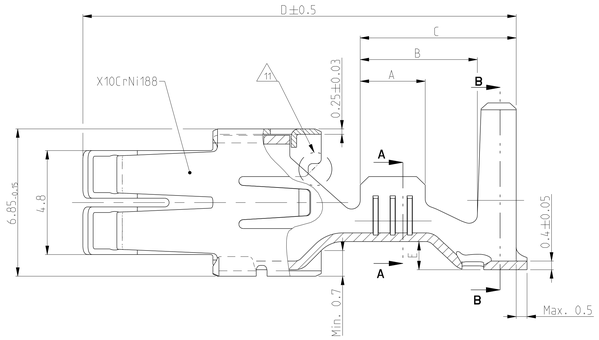

SERRATION DESIGN - 3

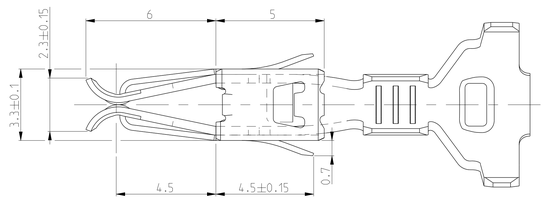

SERRATION DESIGN - 1

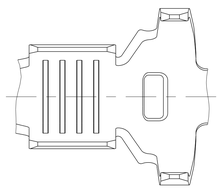

THIS DRAWING IS A CONTROLLED DOCUMENT. DIMENSIONS AND TOLERANCING PER GPS (ISO STANDARDS).	DWN 06APR2011 M.PEEJILSCHER	TE Connectivity	
DIMENSIONS: mm	CHK 17MAY2000 V.HUHN	NAME STANDARD POWER TIMER CONTACT Standard Power Timer Kontakt	
TOLERANCES UNLESS OTHERWISE SPECIFIED: ± 0.05mm ± 0.2mm ± 2°	APVD 17MAY2000 M.BLEICHER		
	PRODUCT SPEC 108-18025		
	APPLICATION SPEC 114-18037	SIZE A0 / CAGE CODE 00779 / DRAWING NO C-1355048	RESTRICTED TO
EXTRACTION TOOL 1-1579007-6 968107-1	WEIGHT -		
MATERIAL - -	FINISH - -	CUSTOMER DRAWING	SCALE 10:1 / SHEET 1 OF 1 / REL. B15

4806 (3/13)