THIS DRAWING IS UNPUBLISHED. RELEASED FOR PUBLICATION -,-
© COPYRIGHT - BY TYCO ELECTRONICS CORPORATION ALL RIGHTS RESERVED.

LOC	DIST
DF	00

REVISIONS

P	LTR	DESCRIPTION	DATE	DWN	APVD
	2	CONVERTED RADIALL DWG TO TYCO ACAD DWG	10/04	—	—
	3	REVISED	06APR10	RF	JM

1. SHELL: ALUMINUM ALLOY 6061 T651
INSERT RETENTION CLIP & GROUNDING SPRING: COPPER ALLOY PER ASTM B194
JACKNUT & RETAINING NUT: STAINLESS STEEL PER AISI 316
JACKNUT SPRING: STAINLESS STEEL PER AISI 302
PROTECTIVE COVER: THERMOPLASTIC ELASTOMER

2. SHELL: ELECTROLESS NICKEL PER SAE AMS-C-26074, CLASS 1.
GROUNDING SPRING: ELECTROLYTIC NICKEL PER SAE AMS-QQ-290.

3. DATE CODE – YEAR & WEEK (YY WW)

4. INDEXING POINT FOR POLARIZATION.

5. 4-40 SCREWS ARE REQUIRED FOR PANEL MOUNTING (NOT INCLUDED)
RECOMMENDED TORQUE 1.1 N-m [10 in-lb] MIN

6. THREADED HOLES ARE SELF-LOCKING, HAVING THE SPIRALOCK® THREAD FORM.
SPIRALOCK® IS A REGISTERED TRADEMARK OF SPIRALOCK CORPORATION.

7. SHELL CAVITY FOR GPRB SERIES INSERTS WITH KEYING CODE A.

8. SHELL CAVITY FOR GPRB SERIES INSERTS WITH KEYING CODE B.

9. PROTECTIVE COVERS NOT SHOWN FOR CLARITY.

10. POLARIZATION FEATURE TO PREVENT FRONT PANEL MOUNTING.

11. SCREW HEAD DIAMETER: 6.00 [.236] MAX.

12. THE JACKNUT AND RETAINING NUT ARE SHIPPED UNASSEMBLED.
THE CUSTOMER SHALL APPLY LOCTITE® PRODUCT 272 THREADLOCKING ADHESIVE
WHEN INSTALLING THESE ON THE SHELL ASSEMBLY. LOCTITE® IS A
REGISTERED TRADEMARK OF LOCTITE CORPORATION.

13. A SPANNER WRENCH TOOL, TYCO ELECTRONICS P/N 1738220-1 (WITH 1/4-in ADAPTER)
OR 1738221-1 (WITH T-HANDLE), IS USED TO LOCK THE RETAINING NUT.
RECOMMENDED LOCKING TORQUE: 1.5 N-m [13 in-lb].

14. PITCH FOR SIDE-BY-SIDE MOUNTING: 19.50 [.768] MIN.

15. DESCRIPTIVE PART NUMBER: GPRB2HL23N
SERIES: GPRB
SHELL SIZE: 2 (TWO-CAVITY SHELL)
SHELL STYLE: H (RECEPTACLE WITH GROUNDING SPRINGS)
MODIFICATION CODE: L (2x 4-40 UNC MOUNTING HOLES FOR REAR PANEL-MOUNTING)
LOCKING & POLARIZING DEVICE: 2 (JACKNUT)
POLARIZATION CODE: 3 (N-Z JACKNUT HARDWARE SHIPPED UNASSEMBLED)
SHELL PLATING: N (NICKEL PLATING)

16. THIS PRODUCT IS SOLD BY TYCO ELECTRONICS UNDER A LICENSE FROM RADIALL SA.

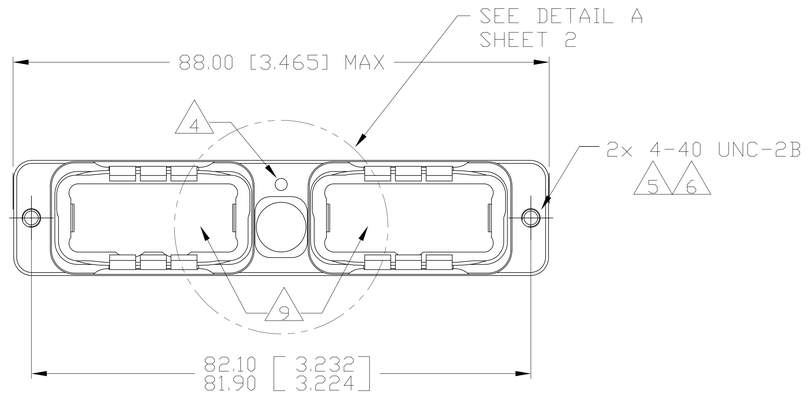

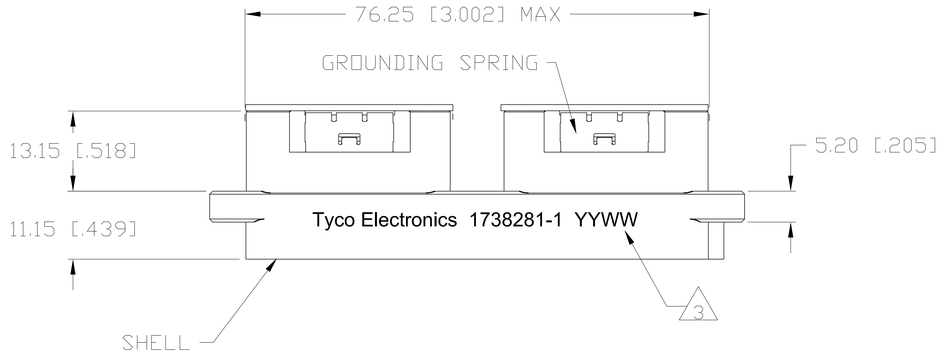

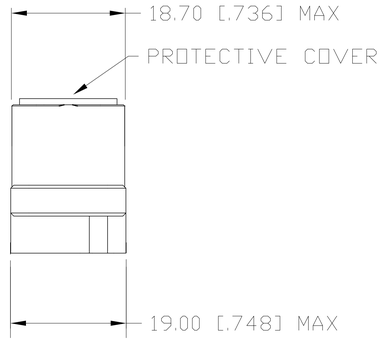

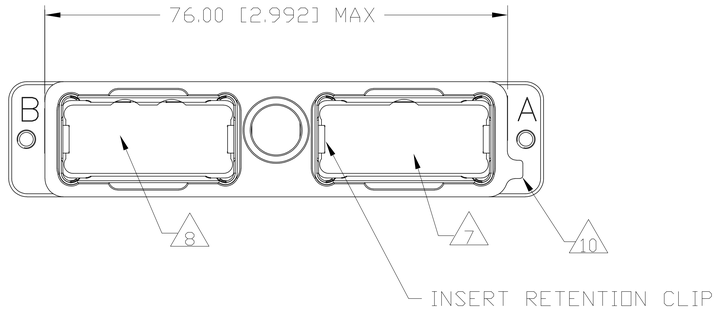

THIS PRINT IS
PRELIMINARY
UNQUALIFIED PRODUCT
CONTACT PRODUCT ENGINEERING
BEFORE USING THIS PRINT

1738281-1
PART NUMBER

THIS DRAWING IS A CONTROLLED DOCUMENT.

DIMENSIONS: mm [INCHES]

TOLERANCES UNLESS OTHERWISE SPECIFIED:
0 PLC ± –
1 PLC ± –
2 PLC ± 0.2 [.008]
3 PLC ± –
4 PLC ± –
ANGLES ± –

MATERIAL 1
FINISH 2

DWN	R. FLAIG	OCT04
CHK	J. MOSIER	OCT04
APVD	J. MOSIER	OCT04
PRODUCT SPEC	—	
APPLICATION SPEC	—	
WEIGHT	—	

CUSTOMER DRAWING

Tyco Electronics
Tyco Electronics Corporation
Harrisburg, Pa 17105-3608

NAME: RECEPTACLE SHELL KIT, REAR PANEL MOUNT, WITH N-Z JACKNUT, GPRB2

SIZE	CAGE CODE	DRAWING NO	RESTRICTED TO
A0	00779	C-1738281	—

SCALE	SHEET	REV
1:1	1 OF 2	3

THIS DRAWING IS UNPUBLISHED. RELEASED FOR PUBLICATION -,-
© COPYRIGHT - BY TYCO ELECTRONICS CORPORATION ALL RIGHTS RESERVED.

LOC	DIST	REVISIONS					
DF	00	P	LTR	DESCRIPTION	DATE	DWN	APVD
			—	SEE SHEET 1	—	—	—

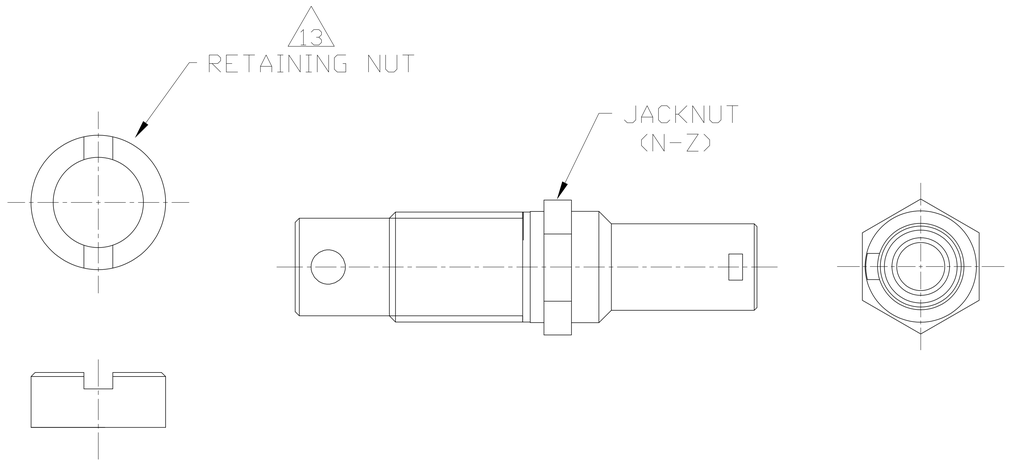

JACKNUT KIT 12

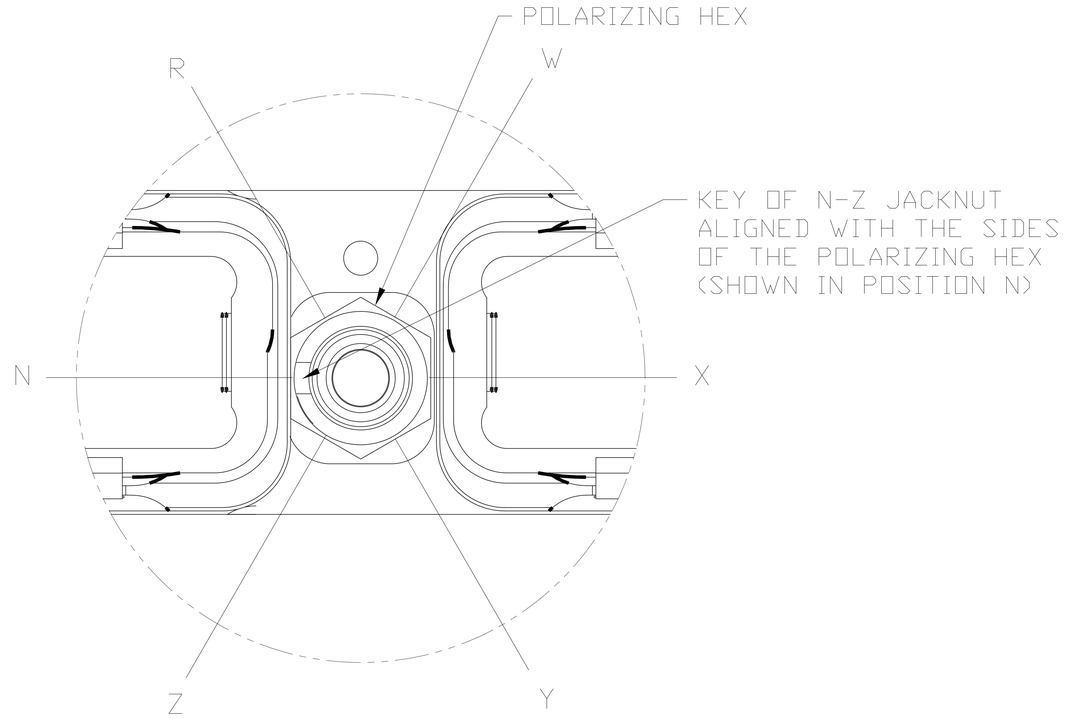

DETAIL A - JACKNUT KIT ASSEMBLED

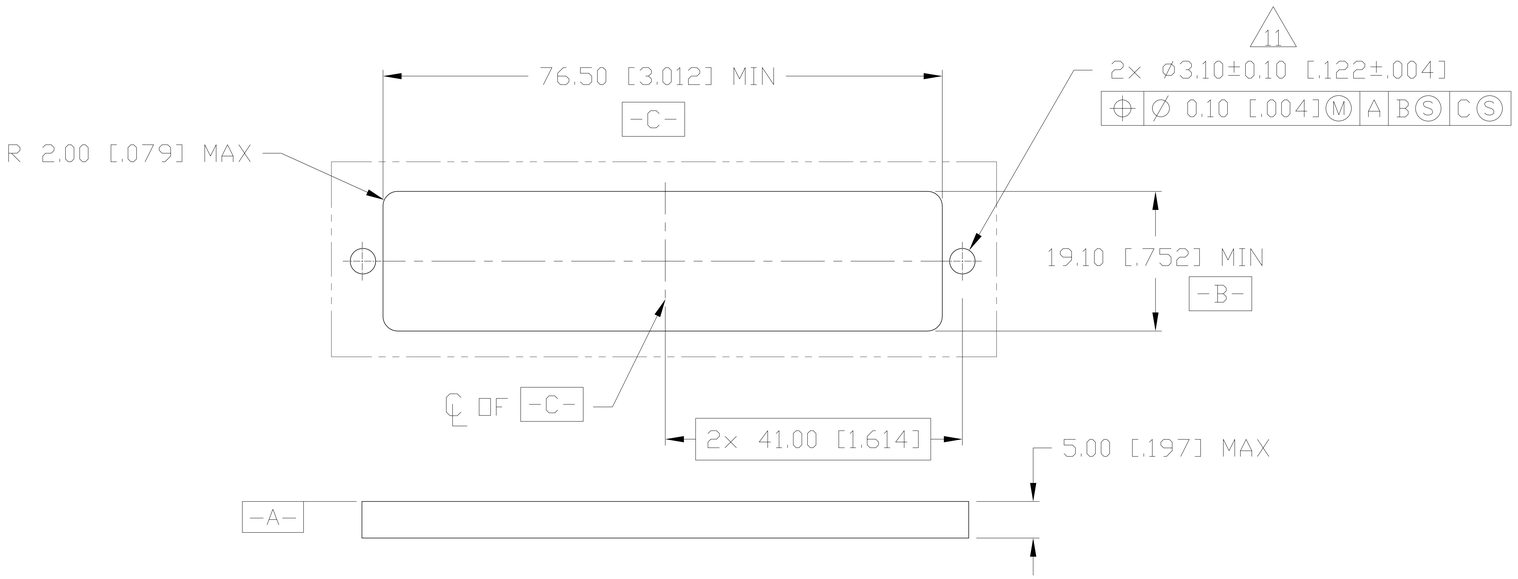

RECOMMENDED PANEL CUTOUT

THIS PRINT IS

PRELIMINARY

UNQUALIFIED PRODUCT
CONTACT PRODUCT ENGINEERING
BEFORE USING THIS PRINT

1738281-1

PART NUMBER

THIS DRAWING IS A CONTROLLED DOCUMENT.

DIMENSIONS: mm [INCHES]

TOLERANCES UNLESS OTHERWISE SPECIFIED
0 PLC ± –
1 PLC ± –
2 PLC ± 0.2 [.008]
3 PLC ± –
4 PLC ± –
ANGLES ± –

MATERIAL: 1
FINISH: 2

DWN: R FLAIG OCT04
CHK: J MOSIER OCT04
APVD: J MOSIER OCT04
PRODUCT SPEC: —
APPLICATION SPEC: —
WEIGHT: —

Tyco Electronics
Tyco Electronics Corporation
Harrisburg, Pa 17105-3608

NAME: RECEPTACLE SHELL KIT, REAR PANEL MOUNT, WITH N-Z JACKNUT, GPRB2

SIZE	CAGE CODE	DRAWING NO	RESTRICTED TO
A0	00779	C-1738281	—

CUSTOMER DRAWING | SCALE 1:1 | SHEET 2 OF 2 | REV 3