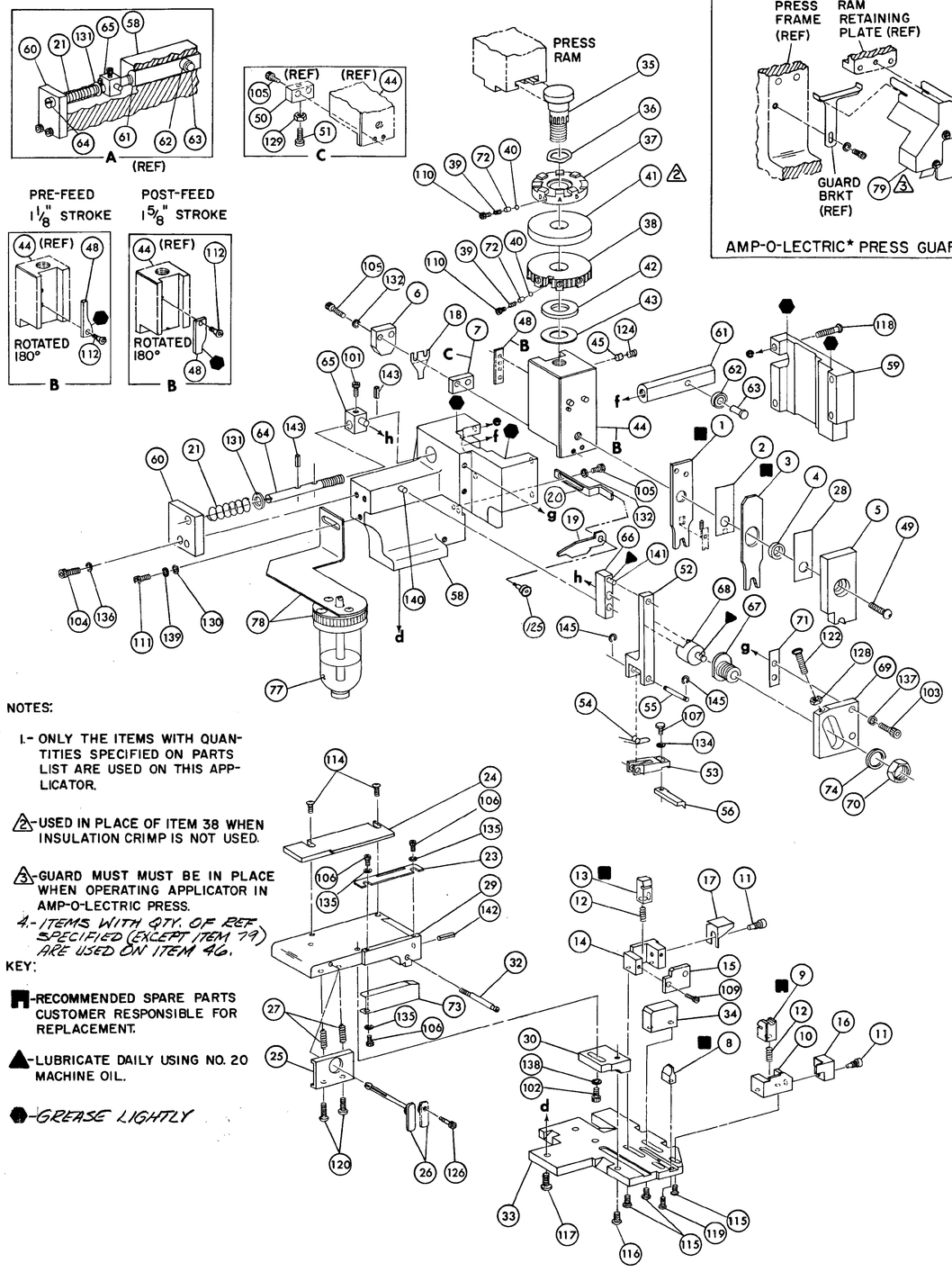

NOTES:

1.- ONLY THE ITEMS WITH QUANTITIES SPECIFIED ON PARTS LIST ARE USED ON THIS APPLICATOR.

2-USED IN PLACE OF ITEM 38 WHEN INSULATION CRIMP IS NOT USED.

3-GUARD MUST MUST BE IN PLACE WHEN OPERATING APPLICATOR IN AMP-O-LECTRIC PRESS.

4.-ITEMS WITH QTY. OF REF. SPECIFIED (EXCEPT ITEM 79) ARE USED ON ITEM 46.

KEY:

■-RECOMMENDED SPARE PARTS CUSTOMER RESPONSIBLE FOR REPLACEMENT.

▲-LUBRICATE DAILY USING NO. 20 MACHINE OIL.

⬢-GREASE LIGHTLY

QTY	PART NO	DESCRIPTION	ITEM NO
REF.	21045-3	RING, RETAINING 'C' (.187 DIA) FEED FINGER PIN	145
			144
REF.	5-21028-1	PIN, SLOT SPR (.125 DIA X .50) ADJ ROD	143
1	4-21028-0	PIN, SLOT SPR (.093 DIA X .75) STR G PLATE	142
REF.	1-21030-1	PIN, DOWEL (.187 DIA X .50) LEVER	141
REF.	1-21030-6	PIN, DOWEL (.187 DIA X 1.25) HOUSING	140
—	21024-5	WASHER, LOCK (NO 10) LUB ASSY	139
1	21024-5	WASHER, LOCK (NO 10) STRIP GUIDE ADJ BLOCK	138
REF.	21024-5	WASHER, LOCK (NO 10) ADJ PLATE	137
REF.	21024-5	WASHER, LOCK (NO 10) FEED GUIDE ROD	136
3	21057-2	WASHER, LOCK (NO 4) FRONT STRIP GUIDE	135
1	21024-4	WASHER, LOCK (NO 8) FEED FINGER	134
—	21024-4	WASHER, LOCK (NO 8) DEPRESSOR	133
3	21024-4	WASHER, LOCK (NO 8) STRIPPER	132
REF.	21899-4	WASHER, FLAT (5/16 DIA) SCREW ADJ	131
—	21899-2	WASHER, FLAT (NO 10) LUB ASSY	130
1	21018-5	NUT, HEX MACH (6-32) HOLDDOWN	129
REF.	21068-5	NUT, HEX MACH (6-32) FEED ADJ	128
			127
—	22353-8	SCR, SHLD. (.187 DIA X .250 LG) DRAG LEVER	126
1	456567-1	SCR, SHLD (.187 DIA X .125) STRIPPER	125
1	21009-2	SCR, SKT SET (1/4-20 X .25)(LOC-WEL) RAM	124
			123
REF.	3-21064-2	SCR, RD HD MACH (6-32 X 1.50) FEED ADJ	122
			121
2	2-21002-9	SCR, BUT HD SKT CAP (10-32 X .75) DRAG	120
1	22733-8	SCR, BUT HD SKT CAP (8-32 X .38) (LOC-WEL) ANVIL	119
REF.	2-21002-9	SCR, BUT HD SKT CAP (10-32 X .75) CAP	118
REF.	1-24073-9	SCR, BUT HD SKT CAP (1/4-20 X .75) HOUSING	117
REF.	2-21002-7	SCR, BUT HD SKT CAP (10-32 X .50) SG ADJ BLOCK	116
4	2-21002-2	SCR, BUT HD SKT CAP (8-32 X .50) SHEAR	115
2	2-21002-1	SCR, BUT HD SKT CAP (8-32 X.38) R STRIP GUIDE	114
			113
1	2-21003-0	SCR, FLAT HD SKT CAP (6-32 X. 50) CAM	112
—	3-21000-4	SCR, SKT HD CAP (10-32 X .38) LUBRICATOR ASSY	111
1	23030-1	SCR, SKT HD CAP (6-32 X .25) (LOC-WEL) CP DISC	110
		SCR, SKT HD CAP (6-32 X) REAR SHEAR PLATE	109
		SCR, SKT HD CAP (8-32 X) DEPRESSOR	108
1	2-22603-0	SCR, HEX HD MACH (8-32 X .31) FEED FINGER	107
3	1-21000-3	SCR, SKT HD CAP (4-40 X .25) F STRIP GUIDE	106
3	2-21000-7	SCR, SKT HD CAP (8-32 X .50) STRIPPER	105
REF.	3-21000-7	SCR, SKT HD CAP (10-32 X .75) FEED ROD GUIDE	104
REF.	3-21000-6	SCR, SKT HD CAP (10-32 X .62) FEED ADJ BLOCK	103
1	3-21000-4	SCR, SKT HD CAP (10-32 X .38) SG ADJ BLOCK	102
REF	3-21000-4	SCR, SKT HD CAP (10-32 X .38) PIVOT BLOCK	101
REF.	455749-1	GUARD, WINDOW △3	79
—	1-465184-0	LUBRICATOR ASSY	78
		OIL, LUBRICATING	77
			76
1	21018-5	NUT, DEPRESSOR	75
REF	458109-1	WASHER, SPECIAL	74
1	454877-3	PLATE, STRIP GUIDE COVER	73
1	690603-1	SPRING, ASSIST	72
REF.	690517-1	SPACER	71
	22594-8	NUT, HEX	70
	240628-1	PLATE, ADJUSTMENT	69
	240626-1	SHAFT, PIVOT	68
	240633-1	BUSHING	67
	455680-1	LEVER, INTERMEDIATE	66
	240629-1	BLOCK, PIVOT	65
	240632-2	SCREW, ADJUSTMENT FEED ROD	64
	240659-3	PIN, CAM ROLLER	63
	240658-1	ROLLER, CAM	62
	454398-2	ROD, FEED	61
REF.	454178-1	GUIDE, FEED ROD	60

QTY	PART NO	DESCRIPTION	ITEM NO
REF.	454220-1	CAP, HOUSING	59
REF.	454485-1	HOUSING	58
			57
1	690542-2	PAWL, FEED	56
REF.	240624-1	PIN, FEED FINGER	55
REF.	691499-1	SPRING, FEED FINGER	54
REF.	690541-1	FINGER, FEED	53
REF.	455679-1	LEVER, TERMINAL FEED ARM	52
1	811242-2	BUMPER, HOLDDOWN	51
1	690753-1	SPACER, TONKER	50
1	7-21002-9	BOLT, CRIMPER	49
1	690602-5	CAM PRE-FEED 1 1/8 STROKE	48
			47
1	459456-1	APPLICATOR, BASIC (SUB ASSY)	46
1	690191-1	PLUG, NYLON	45
1	455673-1	RAM	44
1	690125-1	WASHER, LAMINATED	43
1	690124-1	WASHER, RAM	42
1	690223-1	DISC, SPACER	41
1	23241-6	BALL, STEEL	40
1	690170-1	SPRING, COMPRESSION	39
		DISC, INSULATION	38
1	3-690141-4	DISC, WIRE	37
1	22480-5	WASHER, SPRING	36
1	690212-1	POST, RAM	35
1	690786-3	SUPPORT, TERMINAL	34
REF.	455675-1	PLATE, BASE	33
1	690432-3	SCREW, ADJUSTMENT	32
			31
REF.	455689-1	BLOCK, STRIP GUIDE ADJ	30
1	1-455671-6	PLATE, STRIP GUIDE	29
1	2-455888-2	SPACER, FRONT SHEAR DEPRESSOR	28
2	1-22284-0	SPRING, DRAG	27
1	690546-1	LEVER, DRAG RELEASE	26
1	240792-1	DRAG, STOCK	25
1	2-690440-6	GUIDE STRIP (REAR)	24
1	690438-1	GUIDE, STRIP (FRONT)	23
			22
REF.	4-22284-9	SPRING, FEED RETURN	21
1	458950-1	ARM, STRIPPER	20
1	458949-1	STRIPPER	19
		HOLDER, TERMINAL	18
		GUARD, CHIP (REAR)	17
1	691667-1	GUARD, CHIP (FRONT)	16
		PLATE, SHEAR (REAR) ■	15
		HOLDER, SHEAR (REAR)	14
		SHEAR, FLOAT (REAR) ■	13
1	5-22280-0	SPRING, SHEAR	12
1	690461-1	STOP, SHEAR	11
1	690459-1	HOLDER, SHEAR (FRONT)	10
1	454276-1	SHEAR, FLOAT (FRONT) ■	9
1	1-683403-5	ANVIL ■	8
		SPACER, DEPRESSOR (REAR)	7
		DEPRESSOR, SHEAR (REAR)	6
1	455889-9	DEPRESSOR, SHEAR (FRONT)	5
		SPACER, TUBULAR, INS CRIMPER	4
		CRIMPER, INSULATION ■	3
		SPACER, CRIMPER	2
1	3-456404-1	CRIMPER, WIRE ■	1

CRIMPING DATA

PAD LTR	CRIMP HEIGHT	WIRE SIZE	WIRE STRIP LENGTH
A	.040	20	
B	.037	22	
C	.034	24	
D	NOT USED		

CRIMP	SIZE	TYPE	FEED	APPL INST
WIRE	.070	F	.300	A1 8040
INSUL	—	—		

WIRE RANGE 24-20 — INSULATION RANGE — — PRESS NO 565435-5

REMARKS PRE-FEED AMP-O-LECTRIC

APPLICATOR WILL APPLY

	61463

REMARKS

—INACTIVE—

NO | REV

TO APPLY TERMINAL

APPL USED ON MACHINE PART NO	MACH SERIAL NO	DISTRIBUTION
CUSTOMER NAME	APPL SERIAL NO	ORIGINAL
ADDRESS	PURCHASE ORDER	CUSTOMER COPY
CITY	ENG APP	FIELD ENG COPY

P F	LTR	REVISION RECORD	APP	DATE
B	0150-8500-98			
A2	0150-8500-96			
A1	0150-6784-96			
A	ECN A155288			
0	SUPSDS 466474-2 R3647			

SET UP GAGE 458637-1 331 — DR 4-12-75 — APP 8-18-75 — CHK 8-18-75 — REL 8-18-75 — LOC A — D — NO 466474-4 — REV B

AMP INCORPORATED Harrisburg, Pa.

NAME MINIATURE QUICK CHANGE APPLICATOR SIDE FEED (EXTRUDED RING)

CUSTOMER AND ASSEMBLY DRAWING

DIST 66

* Trademark of AMP Incorporated

AMP 2983-3 (8-73)

THIS DRAWING IS A CONTROLLED DOCUMENT.