## LOADING PATTERN MATING SIDE

| | | | | | | | | | | | | | | | | | | | | | | | | |
|---|---|---|---|---|---|---|---|---|---|---|---|---|---|---|---|---|---|---|---|---|---|---|---|---|
| f | 6 | 6 | 6 | 6 | 6 | 6 | 6 | 6 | 6 | 6 | 6 | | | | 6 | 6 | 6 | 6 | 6 | 6 | 6 | 6 | 6 | 6 | 6 |
| e | 5 | 5 | 4 | 4 | 4 | 4 | 4 | 4 | 4 | 4 | 4 | | | | 4 | 4 | 4 | 4 | 4 | 4 | 4 | 5 | 5 | 5 | 5 |
| d | 4 | 4 | 4 | 4 | 4 | 4 | 4 | 4 | 4 | 4 | 4 | | | | 4 | 4 | 4 | 4 | 4 | 4 | 4 | 4 | 4 | 4 | 4 |
| c | 4 | 4 | 4 | 4 | 4 | 4 | 4 | 4 | 4 | 4 | 4 | | | | 4 | 4 | 4 | 4 | 4 | 4 | 4 | 4 | 4 | 4 | 4 |
| b | 4 | 4 | 4 | 4 | 4 | 4 | 4 | 4 | 4 | 4 | 4 | | | | 4 | 4 | 4 | 4 | 4 | 4 | 4 | 4 | 4 | 4 | 4 |
| a | 4 | 4 | 4 | 4 | 4 | 4 | 4 | 4 | 4 | 4 | 4 | | | | 4 | 4 | 4 | 4 | 4 | 4 | 4 | 4 | 4 | 4 | 4 |
| z | 6 | 6 | 6 | 6 | 6 | 6 | 6 | 6 | 6 | 6 | 6 | | | | 6 | 6 | 6 | 6 | 6 | 6 | 6 | 6 | 6 | 6 | 6 |
| POS | 01 | | | | 05 | | | | 10 | | | | | | 15 | | | | | 20 | | | | | 25 |

## LOADED CONNECTOR ASSEMBLY
(FOR EXAMPLE)

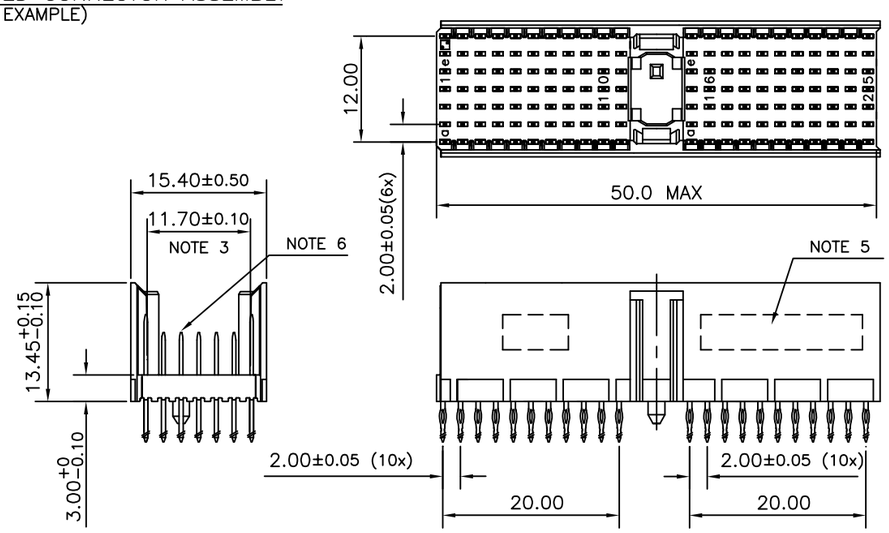


## CONTACT OVERVIEW

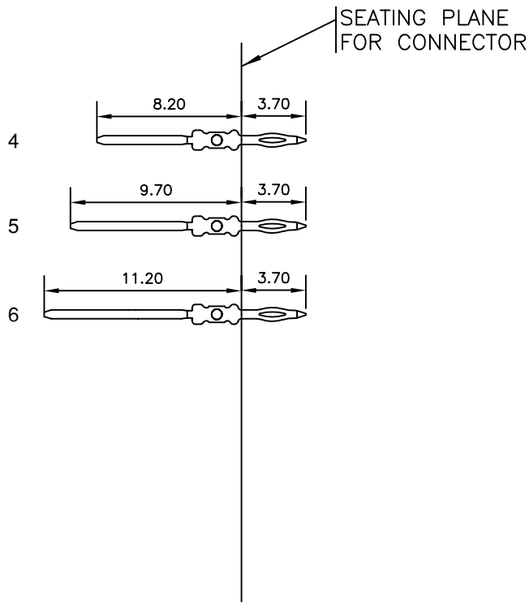


## LAY-OUT P.C.B.-HOLE

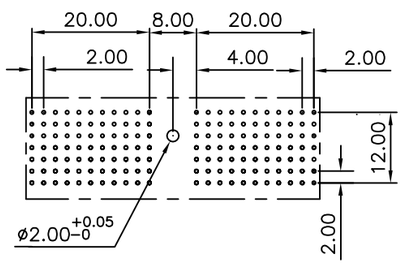


HM2P07PDF3W1- -

LEAD FREE INDICATOR : LF = LEAD FREE
(DIGIT 15 & 16)

PLATING CODE (DIGIT 13 AND 14)
(REF DRW NO. BS,C , 201844 , 003)

## NOTES

1. THIS PRODUCT IS CSA APPROVED.
2. THIS PRODUCT IS UL RECOGNIZED.
3. MEASURED AT THE BOTTOM.
4. MATERIAL CONTACT: PHOSPHORBRONZE
   HOUSING: CREAM WHITE GLASS FILLED POLYESTER UL-94V0
5. CONNECTOR PRINTED WITH P/N AND DATE CODE.
6. FOR ACTUAL CONTACT LOADINGS, SEE LOADING PATTERN MATING SIDE.
7. SHAPE OF CONNECTOR HOUSING CAN ALTER DEPENDING ON PRODUCTION LOCATION
8. THE PRODUCT (LF) MEETS EUROPEAN UNION DIRECTIVES AND OTHER COUNTRY REGULATIONS AS DESCRIBED IN GS-22-008
9. FOR RECOMMENDED PTH DIMENSIONS REFER DRAWING : BS, A , 201572 , 001

CATALOG NO: HM2P07PDF3W1- - - -

| ltr | ecn no | dr | date |
|---|---|---|---|
| A | I05-0010 | MNI | 2005-01-20 |
| B | I05-0199 | MNI | 2005-10-21 |
| C | I06-0099 | MNI | 2006-07-01 |

| | | |
|---|---|---|
| dr | MNI K VANDANATH | 2005-01-20 |
| engr | BIJU K PAUL | 2005-01-20 |
| chr | BIJU K PAUL | 2006-07-01 |
| appd | BIJU K PAUL | 2006-07-01 |

mat'l. code: SEE NOTE 4
surface: ISO 1302
tolerance: ISO 406 ISO 1101
tolerances unless otherwise specified: angles 0°±1°; linear .0±0.2; .00±0.1
projection
MM
scale –
product family: MILLIPACS
title: MPACS 5+2R STR HDR PF CONN TYPE A
dwg no: BS, C ,203028, 201
sheet 1 of 1
size A3
type: Product Customer Drawing
sheet index: revision C; sheet 1

FCIconnect.com
Copyright FCI

form: A3