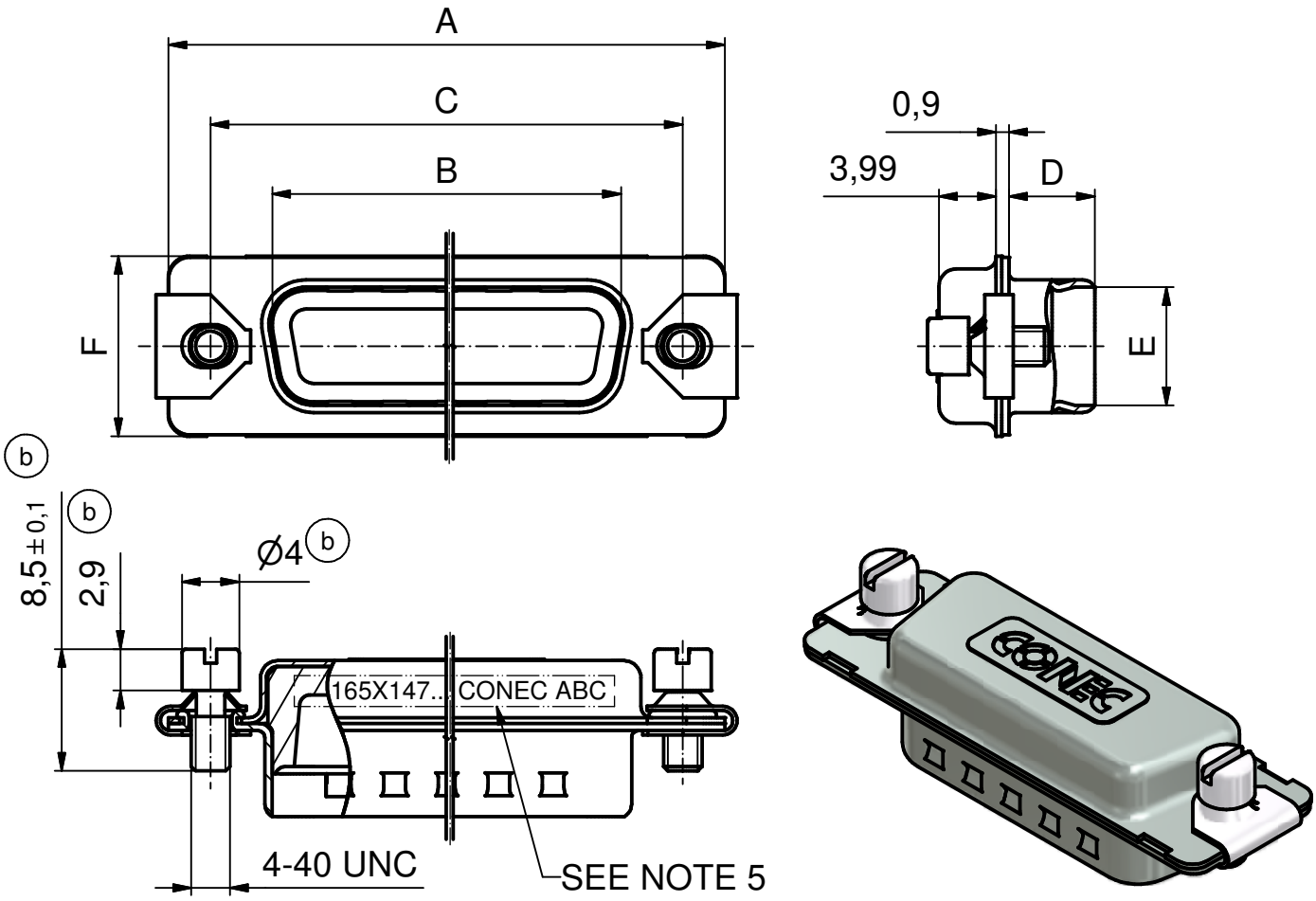

c NOTES:

1. METALSHELLS: COPPER ALLOY;
   min. 315µin TIN over 40-80µin NICKEL
2. INSULATOR: TPE
3. CLAMPS: STAINLESS STEEL
4. SCREW: STAINLESS STEEL
5. d CONNECTOR IS PART MARKED: PART NO. CONEC ABC

No. of pos.	A $_{-0,76}$	B $^{+0,25}$	C	D$_{-0,3}$	d E^{+25}	d F$^{-0,76}$	Part No.: Bulk package	Part No.: e Single package
9	31,19	16,79	25,00 $^{+0,12}_{-0,10}$	6,12	8,23	12,93	165X14719X	165X14719XE
15	39,52	25,12	33,30 $^{+0,15}$	6,12	8,23	12,93	165X14729X	165X14729XE
25	53,42	38,84	47,04 ± 0,13	5,99	8,23	12,93	165X14739X	165X14739XE
37	69,70	55,30	63,50 $^{+0,13}_{-0,11}$	5,99	8,23	12,93	165X14749X	165X14749XE
50	67,31	52,68	61,10 $^{+0,14}_{-0,11}$	5,99	10,95	15,75	165X14759X	165X14759XE

THIS DRAWING MAY NOT BE COPIED OR REPRODUCED IN ANY WAY, AND MAY NOT BE PASSED ON TO A THIRD PARTY WITHOUT WRITTEN PERMISSION. OWNERSHIP AND COPYRIGHT OF CONEC GmbH

DO NOT ALTER CAD DRAWING BY HAND

rev.	description	date	name
1 x e	Ä4033	30.06.2011	K.H.
3 x d	Ä3662	23.08.2010	K.H.
1 x c	Ä1912	06.04.2004	Lehmen.
3 x b	Ä1788	06.06.2004	Lehmen.
a	Origin		

tolerance — dim. in mm

	date	name
drawn	10.09.01	E.Mickenbecker
appd.	10.09.01	A.Mickenbecker
norm	DIN 41652	
d-old		

CONEC®

scale: 2:1

material: SEE NOTES

title: HOOD 9 - 50pos.
FOR SOCKET CONNECTOR
water resiatant, shielded for EMI/RFI

dwg no: 16K1A291A

Inventor 10

DIN-A4

sh: 1

part no: SEE TABLE