THIS DRAWING IS UNPUBLISHED. RELEASED FOR PUBLICATION
(C) COPYRIGHTED BY TYCO ELECTRONICS CORPORATION. ALL RIGHTS RESERVED.

LOC	SHEET
1K	2

REVISIONS

LTR	DESCRIPTION	DATE	DWN	APVD
A1	ESEO-0077-03	01-Oct-03	JG	JG
B	ESEO-0110-03	30-Nov-03	JG	JG
C	ESEO-0122-03	17-Nov-03	JG	AP

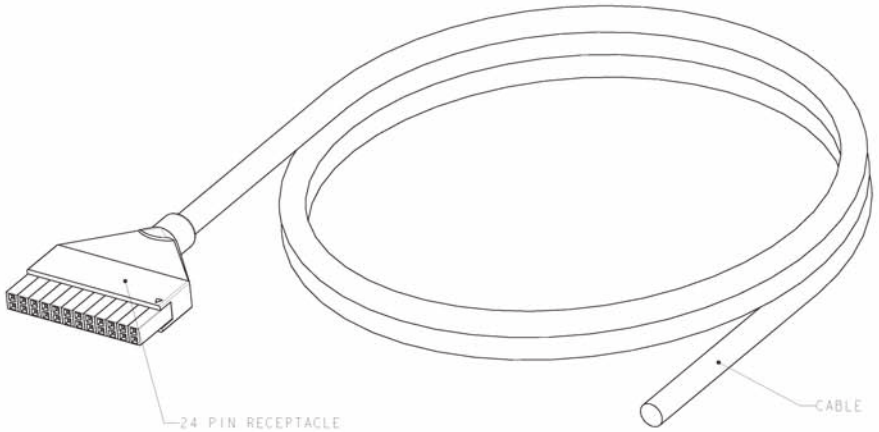

△1 CABLE ASSEMBLY SHALL BE WIRED PER WIRING DIAGRAM.

△2 ABCD IS DATE CODE, AB - YEAR, CD - WEEK.

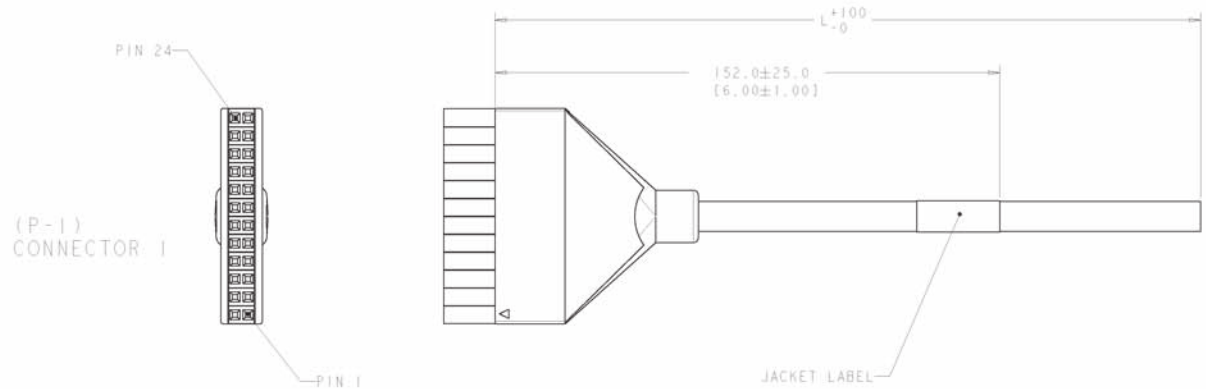

△1

COLOR CODING AND WIRING SCHEME		
CONDUCTOR NO.	INSULATION COLOR	CONNECTOR 1 PIN NO.
1	WHITE/BLUE	1
2	BLUE/WHITE	2
3	WHITE/ORANGE	3
4	ORANGE/WHITE	4
5	WHITE/GREEN	5
6	GREEN/WHITE	6
7	WHITE/BROWN	7
8	BROWN/WHITE	8
9	WHITE/GRAY	9
10	GRAY/WHITE	10
11	RED/BLUE	11
12	BLUE/RED	12
13	RED/ORANGE	13
14	ORANGE/RED	14
15	RED/GREEN	15
16	GREEN/RED	16
17	RED/BROWN	17
18	BROWN/RED	18
19	RED/GRAY	19
20	GRAY/RED	20
21	BLACK/BLUE	21
22	BLUE/BLACK	22
23	BLACK/ORANGE	23
24	ORANGE/BLACK	24

△2

AMPTRAC I/O CABLE 24AWG FH01 LSZH ABCD

CABLE MARKING

METER	L	PART NO.
7	15000.0	1-1435487-5
6	10000.0	1-1435487-0
5	5020.0 - 5170.0 [197.64 - 203.54]	1435487-5
4	4000.0	1435487-4
3	3000.0	1435487-3
2	2010.0 - 2110.0 [79.13 - 83.07]	1435487-2
1	1000.0	1435487-1

DIMENSIONS: MM [INCHES]
TOLERANCES UNLESS OTHERWISE SPECIFIED: 0 PLC ±1; 1 PLC ±0; 2 PLC ±0; 3 PLC ±0; 4 PLC ±0; ANGLES ±1°
MATERIAL: -
FINISH: -

DWN: L. SMITH 18NOV2002
CHK: ***
APVD: P. PERE ***
PRODUCT SPEC: -
APPLICATION SPEC: -
WEIGHT: -
CUSTOMER DRAWING

tyco Electronics
Tyco Electronics AMP España S.A.
Barcelona, Spain

NAME: AMPTRAC I/O CABLE TO IDC LSZH

SIZE: A1 | CAGE CODE: 00779 | DRAWING NO: C-1435487 | RESTRICTED TO: -

SCALE: NTS | SHEET 1 OF 1 | REV C

AMP 8645 REV 01MAR2000
Pro/ENGINEER DRAWING