THIS DRAWING CONTAINS INFORMATION THAT IS PROPRIETARY TO J.S.T. AND SHALL NOT BE USED OR SHOWN WITHOUT WRITTEN PERMISSION.

| ITEM | CONNECTOR PART NO. | DESCRIPTION | IPI CHECK | EOR CHECK |
|---|---|---|---|---|
| 1 | SVF-61T-P2.0 | VL CONNECTOR - FEMALE CONTACT | | |
| 2 | UL1015, 14 AWG | BLACK | | |

Applicable Tooling

APPLICATOR

## Applicable Housings

| NO. OF CIRCUITS | HOUSING PART NO. INNER LOCKS | HOUSING PART NO. OUTER LOCKS |
|---|---|---|
| 1 | VLP-01V | VLP-01V-1 |
| 2 | VLP-02V | VLP-02V-1 |
| 3 | VLP-03V | VLP-03V-1 |
| 4 | VLP-04V | VLP-04V-1 |
| 4 | - | VLP-04VN-1 |
| 6 | VLP-06V | VLP-06V-1 |
| 8 | VLP-08V | VLP-08V-1 |
| 12 | VLP-12V | VLP-12V-1 |

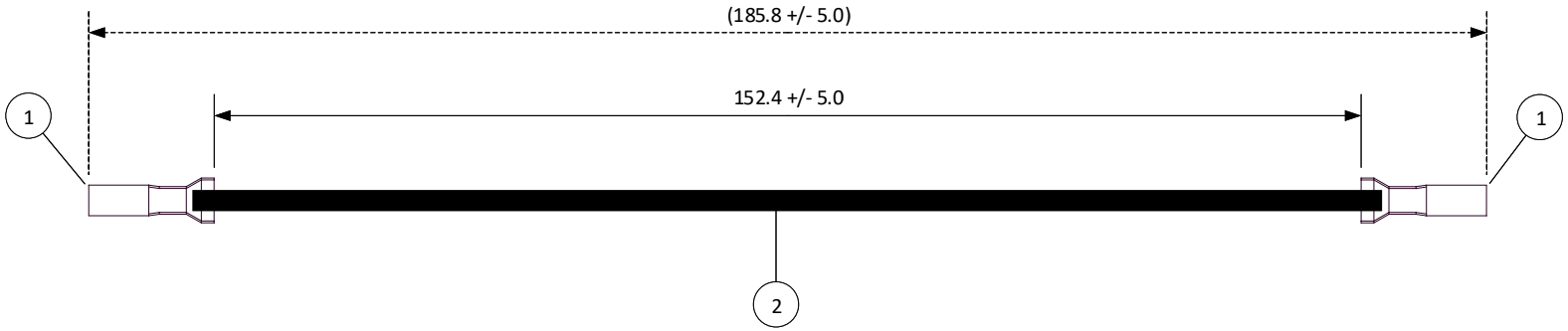


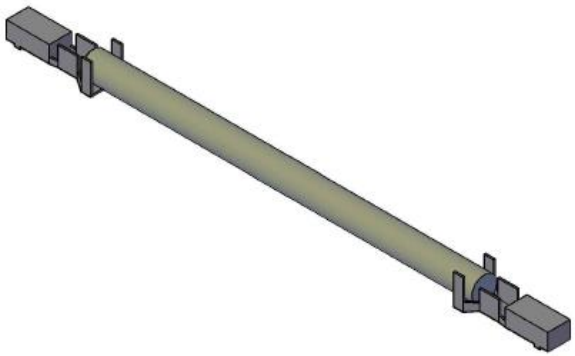

| REV. | DESCRIPTION | DATE | BY |
|---|---|---|---|
| | | | |

| | | |
|---|---|---|
| SCALE 1: 1 | CUSTOMER NAME | CUSTOMER PART NO. |
| DIMENSIONS All dimensions are in MM with a tolerance of +/- 3.0 unless otherwise specified. | DESCRIPTION 6.2 mm Pitch VL Series Standard Leads - 6" Inside Length DOUBLE-END LEADS, F-F | |
| DRAWN BY STEVEN PILKINGTON | ASSEMBLY PART NO. ASVFSVF14K152 | |
| CHECKED BY JUSTIN BAKER | DRAWING NO. & REVISION GAM-098 | REVISED 3/10/2016 |